Table 1: Summary of rare *ZNF469* sequence variants identified using stringent filtering criteria. Based on a filtering strategy applied previously [26] all *ZNF469* variants identified in the familial keratoconus cohort were stringently filtered to remove: (1) all synonymous variants, (2) all variants with a minor allele frequency (MAF) >0.001 in the 1KG dataset, (3) all variants with a MAF >0.001 in ESP dataset (4) and all variants predicted to be tolerated by SIFT. The following 5 variants were identified.

Nucleotide change	Protein change	dbSNP	SIFT (tolerance index 0-1)	Minor allele frequency (MAF) in control datasets					Allele count in keratoconus familial cohort			
				ESP	1KG	UCL WES	SA WES	Affected	Unaffected <40 years	Suspect	Unaffected >40 years	Family number
c.664G>C	p.(Gly222Arg)	NA	Damaging (0.03)	NI	NI	NI	NI	1/78	0/30	0/14	0/10	3
c.2035G>A	p.(Glu679Lys)	NA	Damaging (0.01)	NI	NI	0.0049	0.0030	2/78	0/30	0/14	0/10	1
c.4337C>T	p.(Ala1446Val)	rs199897247	Damaging (0.03)	NI	NI	0.0122	0.0236	3/78	4/30	0/14	0/10	3
c.5624G>A	p.(Arg1875His)	NA	Damaging (0)	NI	NI	0.0004	NI	5/78	1/30	3/14	0/10	8
c.9011_9025del	p.(Leu3004_Thr3008del)	NA	NA	NI	NI	0.0068	0.0089	1/78	1/30	0/14	2/10	5,9

In silico analysis of rare *ZNF469* variants identified is presented**.** SIFT results are reported to be tolerant if tolerance index is ≥0.05 or intolerant if tolerance index is <0.05. The cDNA is numbered according to transcript ID NM_001127464.1. ESP denotes variants in the NHLBI ESP Release Version: v.0.0.25. (Feb. 7, 2014). 1000 Genome (1KG) donates variants in the release version 14 (October 2013). SA WES refers to 521 Saudi Arabian whole exome sequenced (WES) controls. UCL WES refers to 1,100 WES individuals of varying ethnicity. NA= not applicable; NI = not identified.

Table 2: Summary of rare *ZNF469* sequence variants identified. All variants identified in the keratoconus familial cohort were filtered to remove: (1) all synonymous variants, (2) all variants with a minor allele frequency (MAF) >0.025 in the 1KG dataset, (3) all variants with a MAF>0.025 in ESP dataset, (4) and all variants with a MAF>0.025 in our whole exome sequenced (WES) control datasets.

Nucleotide change	Protein change	dbSNP	SIFT (tolerance index 0-1)	Polyphen 2 (HumVar score 0-1)	Polyphen 2 (Hum Div score 0-1)	Blosum 62 score (-4 to 11)	Minor allele frequency (MAF) in control datasets				Allele count in keratoconus familial cohort				
							ESP	1KG	UCL WES	SA WES	Affected	Unaffected <40 years	Suspect	Unaffected >40 years	Family number
c.664G>C	p.(Gly222Arg)	NA	Damaging (0.03)	Benign (0.011)	Benign (0.007)	-2	NI	NI	NI	NI	1/78	0/30	0/14	0/10	3
c.1697C>T	p.(Ala566Val)	rs181785233	Tolerated (0.06)	Benign (0.359)	POS (0.0.808)	0	NI	0.0050	0.0119	0.0020	2/78	2/30	0/14	0/10	1,3
c.2035G>A	p.(Glu679Lys)	NA	Damaging (0.01)	Benign (0.010)	Benign (0.136)	1	NI	NI	0.0049	0.0030	2/78	0/30	0/14	0/10	1
c.2803G>A	p.(Glu935Lys)	rs117995699	Damaging (0)	PRD (0.978)	POS (0.543)	-2	NI	0.0100	0.0009	0.0030	1/78	0/30	0/14	0/10	1
c.4337C>T	p.(Ala1446Val)	rs199897247	Damaging (0.03)	Benign (0.027)	POS (0.513)	0	NI	NI	0.0122	0.0236	3/78	4/30	0/14	0/10	3
c.5624G>A	p.(Arg1875His)	NA	Damaging (0)	Benign (0.000)	Benign (0.000)	0	NI	NI	0.0004	NI	5/78	1/30	3/14	0/10	8
c.6956C>T	p.(Ala2319Val)	NA	Tolerated (1)	Benign (0.025)	Benign (0.063)	0	NI	NI	NI	NI	1/78	1/30	0/14	1/10	10
c.9011_9025del	p.(Leu3004_Thr3008del)	del	NA	NA	NA	NA	NI	NI	0.0068	0.0089	1/78	1/30	0/14	2/10	5,9
c.10277G>A	p.(Arg3426Gln)	rs75288466	Tolerated (0.32)	POS (0.586)	PRD (0.998)	1	NI	0.0037	0.0105	0.0118	3/78	1/30	0/14	0/10	10

In silico analysis of rare *ZNF469* variants identified is presented**.** SIFT results are reported to be tolerant if tolerance index is ≥0.05 or intolerant if tolerance index is <0.05. Polyphen 2 appraises mutations quantitatively as benign, possibly damaging (POS) or probably damaging (PRD) based on the model's false positive ratio. HumVar score is the preferred model for diagnostics of Mendelian diseases which requires distinguishing mutations with drastic effects from all the remaining human variation, including abundant mildly deleterious alleles. HumDiv is the preferred model for evaluating rare alleles, dense mapping of regions identified by genome-wide association studies, and analysis of natural selection. Blosum62 substitution matrix score positive numbers indicate a substitution more likely to be tolerated evolutionarily and negative numbers suggest the opposite. The cDNA is numbered according to transcript ID NM_001127464.1. ESP denotes variants in the NHLBI ESP Release Version: v.0.0.25. (Feb. 7, 2014). 1000 Genomes (1KG) donates variants in the release version 14 (October 2013). SA WES refers to 521 Saudi Arabian WES controls. UCL WES refers to 1,100 WES individuals of varying ethnicity. NA= not applicable; NI = not identified.

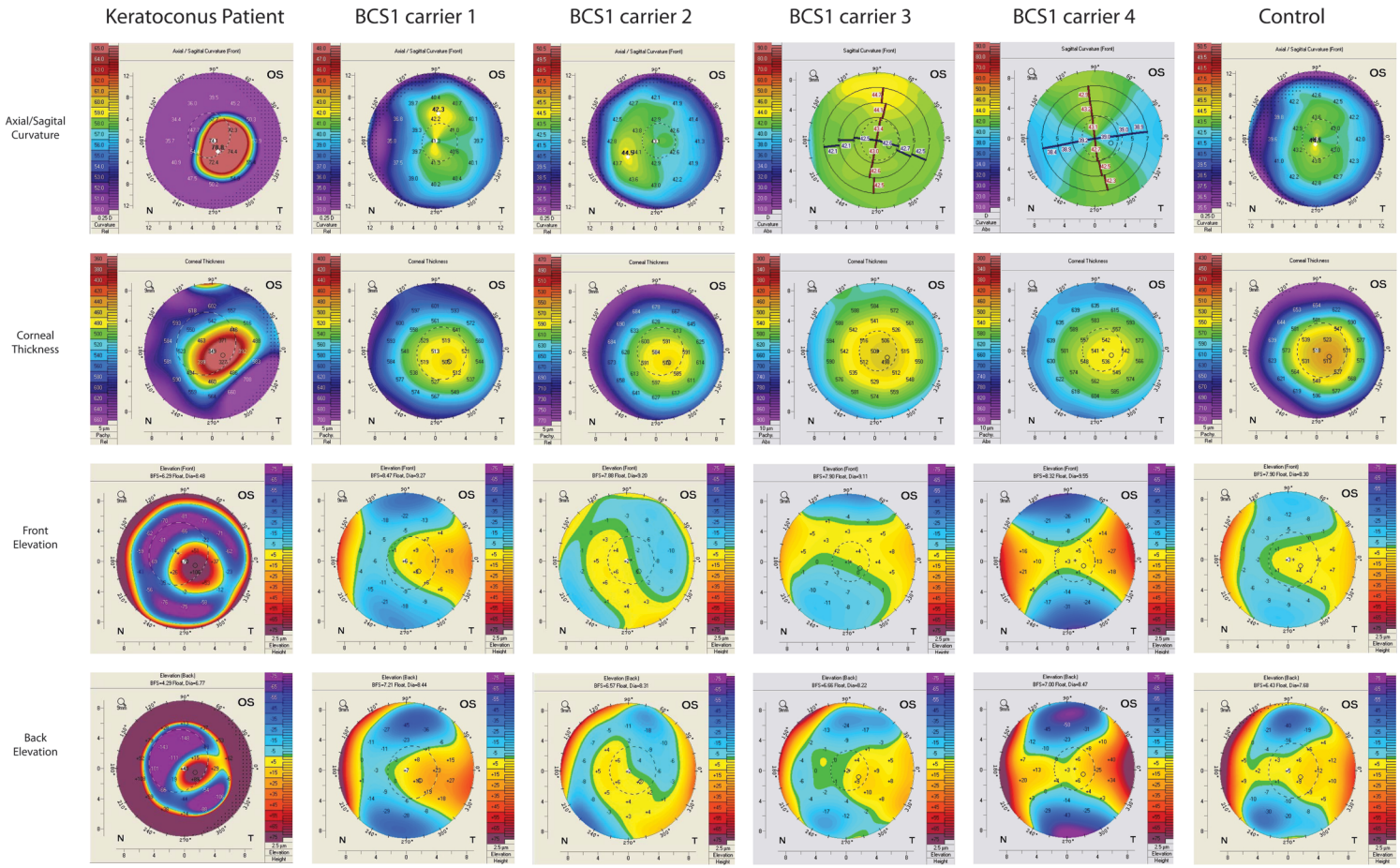
Keratoconus Patient
BCS1 carrier 1
BCS1 carrier 2
BCS1 carrier 3
BCS1 carrier 4
Control
Axial/Sagital Curvature
Corneal Thickness
Front Elevation
Back Elevation
OS
N
T

A: Family 1

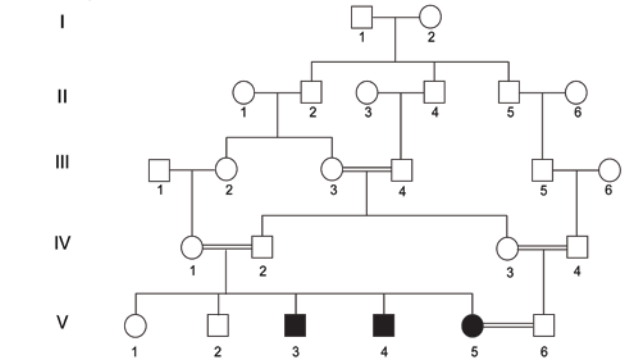

c.1697C>T, p.(Ala566Val)	HET	WT
c.2035G>A, p.(Glu679Lys)	HET	HET
c.2803G>A, p.(Glu935ys)	WT	HET

B: Family 2

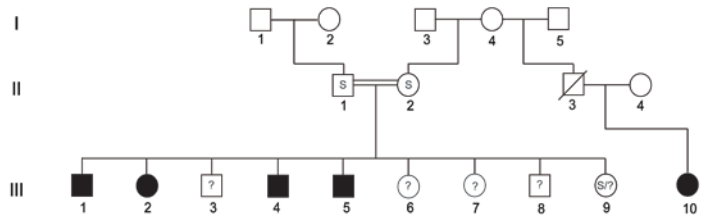

C: Family 3

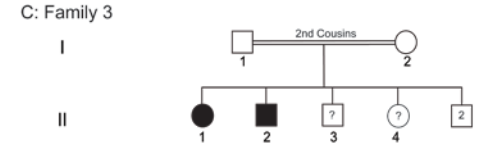

c.664G>C, p.(Gly222Arg)	HET	WT	WT	WT
c.1697C>T, p.(Ala566Val)	WT	HET	HET	HET
c.4337C>T, p.(Ala1446Val)	HET	HOMO	HOMO	HOMO

D: Family 4

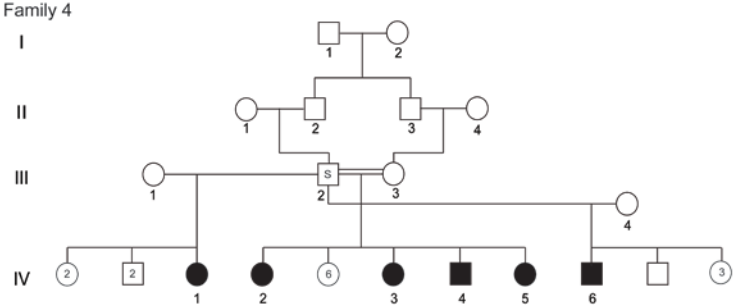

E: Family 5

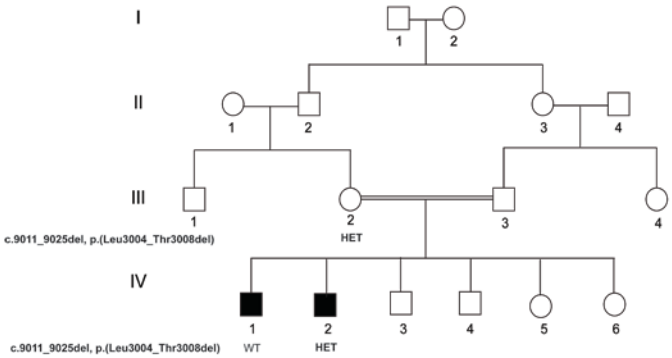

F: Family 6

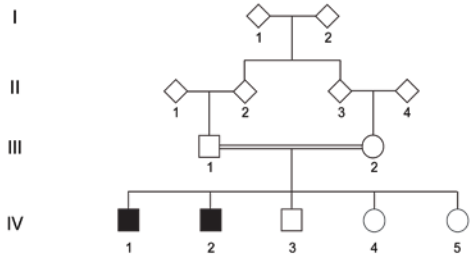

A: Family 7

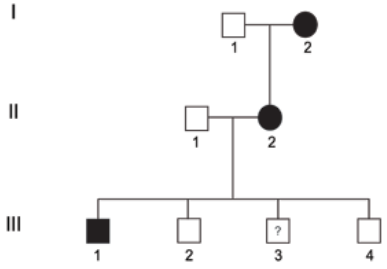

B: Family 8

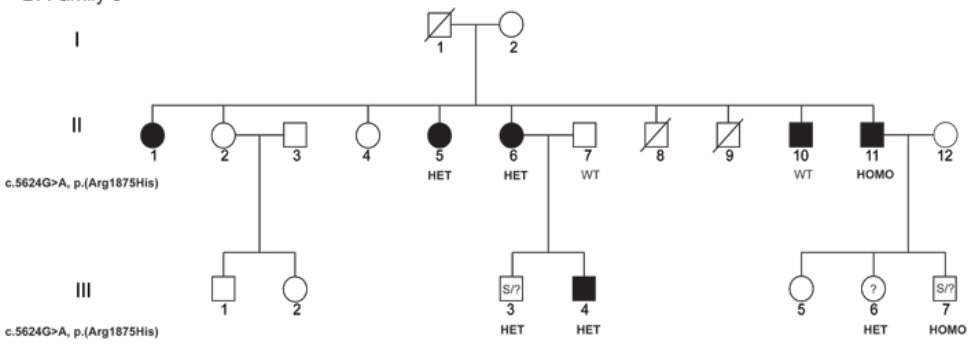

C: Family 9

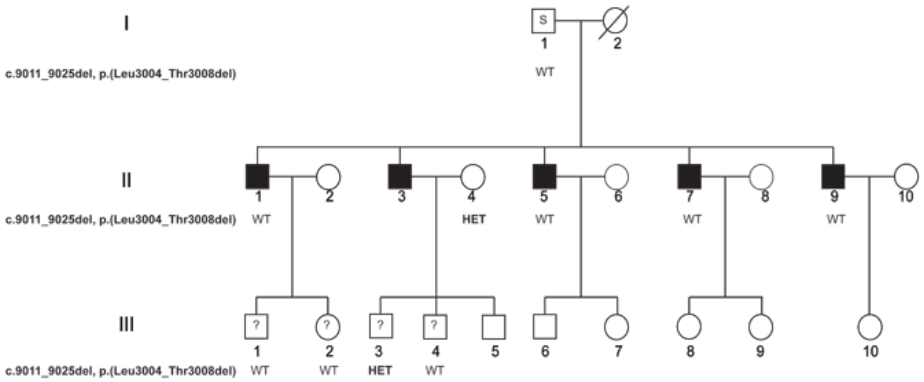

D: Family 10

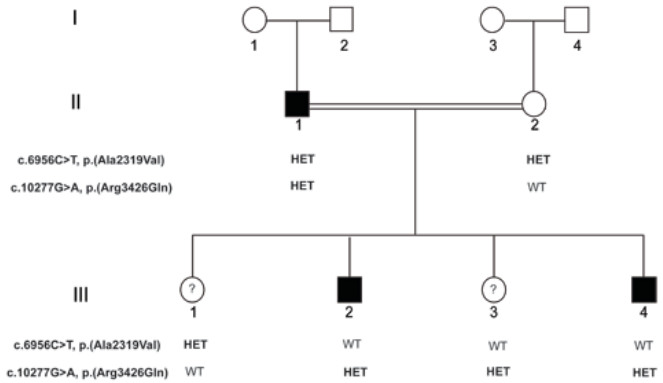

E: Family 11