Journal of Dietary Supplements

ISSN: (Print) (Online) Journal homepage: https://www.tandfonline.com/loi/ijds20

The Efficacy of Chlorella Supplementation on Multiple Indices of Cycling Performance

Tom Gurney, James Brouner & Owen Spendiff

To cite this article: Tom Gurney, James Brouner & Owen Spendiff (2023): The Efficacy of Chlorella Supplementation on Multiple Indices of Cycling Performance, Journal of Dietary Supplements, DOI: 10.1080/19390211.2023.2186557

To link to this article: https://doi.org/10.1080/19390211.2023.2186557

© 2023 The Author(s). Published with license by Taylor & Francis Group, LLC.

View supplementary material

Published online: 11 Mar 2023.

Submit your article to this journal

Article views: 376

View related articles

View Crossmark data

Full Terms & Conditions of access and use can be found at
https://www.tandfonline.com/action/journalInformation?journalCode=ijds20

JOURNAL OF DIETARY SUPPLEMENTS
https://doi.org/10.1080/19390211.2023.2186557

Taylor & Francis
Taylor & Francis Group

RESEARCH ARTICLE

OPEN ACCESS Check for updates

The Efficacy of Chlorella Supplementation on Multiple Indices of Cycling Performance

Tom Gurney[a,b], James Brouner[a] and Owen Spendiff[a]

[a]School of Life Sciences, Kingston University, Kingston upon Thames, England; [b]Division of Surgery & Interventional Science, University College London, London, England

ABSTRACT

This study investigated the effects of chlorella supplementation on submaximal endurance, time trial performance, lactate threshold, and power indices during a repeated sprint performance test by fourteen male trained cyclists. Participants ingested 6 g/day of chlorella or placebo for 21-days in a double-blinded randomized counter-balanced cross-over design, with a fourteen-day washout period between trials. Each completed a 2-day testing period comprising a 1-hour submaximal endurance test at 55% external power output max and a 16.1 km time trial (Day-1), followed by a lactate threshold (Dmax) and repeated sprint performance tests (3 X 20 s sprints interspersed by 4-mins) (Day-2). Heart rate ($b \cdot min^{-1}$), RER, VO_2 ($ml \cdot kg^{-1} \cdot min^{-1}$), lactate and glucose (mmol/L), time (secs), power output (W/kg), and hemoglobin (g/L) were compared across conditions. Following chlorella supplementation (chlorella vs. placebo for each measurement) average lactate and heart rate were significantly lower ($p < 0.05$) during submaximal endurance tests (1.68 ± 0.50 mmol/L vs. 1.91 ± 0.65 mmol/L & 138 ± 11 $b \cdot min^{-1}$ vs. 144 ± 10 $b \cdot min^{-1}$), average power and peak power (W/kg) were significantly higher during repeated sprint bouts (9.5 ± 0.7 W/kg vs. 9.0 ± 0.7 W/kg & 12.0 ± 1.2 W/kg vs. 11.4 ± 1.4 W/kg), hemoglobin significantly increased (149.1 ± 10.3 g/L) in comparison to placebo (143.4 ± 8.7 g/L) ($p = 0.05$). No differences existed between conditions for all oxygen consumption values, 16.1 km time trial measures and lactate threshold tests ($p > 0.05$). In conclusion, chlorella may pose as an additional supplement for cyclists to consider, particularly for those cyclists who want to improve their sprinting.

KEYWORDS
Algae; average power; heart rate; hemoglobin; oxygen consumption; peak power

Introduction

Microalgae are an emerging functional food source that is gaining traction and popularity in biopharmaceutical, nutraceutical, and biotechnology industries. They are a diverse and complex species that comprise an abundant breadth of micronutrients (multiple vitamins, minerals, fatty acids, and amino acids) that can promote human health (Wells et al. 2017), and possibly performance (Gurney and Spendiff 2022). Spirulina and chlorella are currently the most popular microalgae supplements on the market which possess similar nutritional qualities (see Andrade and colleagues (Andrade

CONTACT Tom Gurney T.Gurney@kingston.ac.uk Kingston University, Kingston upon Thames, KT1 2EE, England
Supplemental data for this article is available online at https://doi.org/10.1080/19390211.2023.2186557

© 2023 The Author(s). Published with license by Taylor & Francis Group, LLC.
This is an Open Access article distributed under the terms of the Creative Commons Attribution License (http://creativecommons.org/licenses/by/4.0/), which permits unrestricted use, distribution, and reproduction in any medium, provided the original work is properly cited. The terms on which this article has been published allow the posting of the Accepted Manuscript in a repository by the author(s) or with their consent.

et al. 2018) for an in-depth comparison) and are readily available in powdered, capsule, and pill form. Previously the focus has been on their clinical application and potential (Wells et al. 2017), though some researchers have attempted to bridge the gap between these positive clinical findings and the potential for microalgae as an ergogenic aid (Gurney and Spendiff 2022). However thus far, there is a clear disparity in research volume within the Sport and Exercise Nutrition field between spirulina and chlorella. Spirulina has received the most attention yet has produced some equivocal results (Gurney and Spendiff 2022). Despite the similar nutritional qualities between spirulina and chlorella, chlorella contains higher concentrations of iron, omega-3 fatty acids, vitamin A, riboflavin, iron, magnesium, niacin and zinc (Andrade et al. 2018). Therefore, it's worthy to investigate whether chlorella has analogous function and potential during exercise.

In clinical trials and meta-analyses chlorella supplementation has previously generated an improvement in immune function (increased secretion of salivary secretory immunoglobulin A) within healthy males and females (Otsuki et al. 2011; Chidley and Davison 2018), as well as cardiovascular risk factors and blood lipid profiles within both male and female healthy and clinical populations (hypertension, dyslipidemia, diabetes, and nonalcoholic fatty liver disease) (Fallah et al. 2018; Sherafati et al. 2022). Chlorella's potential vasodilatory properties have also previously been investigated where reductions in arterial stiffness following a 6 g/day 28-day supplementation protocol in both young males and middle-aged individuals were reported (Otsuki et al. 2013; 2015). Suggestions that the carotenoids (lutein, β-Carotene and zeaxanthin), polyunsaturated fatty acids (PUFA), linoleic acid and water-soluble fibers found in chlorella can bind to digested fat, increase plasma scavenging of LDL-C (low density lipoprotein), and reduce absorption of sterols (cholesterol) from the intestine were some of the purported mechanisms of action.

From an exercise performance perspective, significant augmentations in peak oxygen uptake in nutritionally insufficient young men following a 6 g/day 28-day supplementation protocol has been reported (Umemoto and Otsuki 2014; Zempo-Miyaki et al. 2017), with the proposed mechanisms of action being improvements in nutritional status, as well as the arginine content in chlorella potentiating the production of Nitric Oxide (NO) – a known signaler of vasodilation. The iron content in chlorella has previously been attributed to improving Hb in rats (Gao et al. 2019) and pregnant women (Nakano et al. 2010), as such further research is warranted to establish whether chlorella supplementation may also induce similar effects in trained men. In exercising rodents, the influences of chlorella supplementation on exercise capacity and lactate metabolism have demonstrated positive results, with the evidence indicating chlorella may increase the expression of Monocarboxylate-transporters (MCT) and increase maximal swimming times (Mizoguchi et al. 2011; Horii et al. 2017). MCTs play an important role in facilitating lactate transport, and thus metabolism (Brooks 2018). Yet it is currently unknown as to whether chlorella may induce similar positive lactate metabolism results in humans. Efficient lactate metabolism is especially important for cycling whereby it is common for races to comprise uphill sections and intermittent sprint finishes where the prerequisite is to produce high intensity effort with the ability to use brief recovery periods to buffer lactate and any deleterious byproducts associated with fatigue (Bell et al. 2017). Consequently, recent reviews have highlighted the

importance of lactate for energy metabolism during both aerobic and anerobic exercise intensities (Brooks 2018; 2020). Furthermore, during cycling races, producing a continuous high relative power output is a requisite for success (Kordi et al. 2020; 2020) as it has been proposed that peak power (PP) is a determinant of performance (Dorel et al. 2005).

Considering similar microalgae such as spirulina has focused on key performance indicators in cyclists (Gurney et al. 2021), it's worthy to explore whether chlorella may possess similar potential during the same given exercise tests and supplementation/dose period. Indeed, to the best of our knowledge, no study has previously investigated whether a 6 g/day 21-day chlorella supplementation period is also efficacious. Therefore, the aim of this study was to investigate whether 6 g/day supplementation of chlorella for 21-days can improve and influence: respiratory variables and lactate during submaximal endurance tests, Hb, 16.1 km time trials (TT), lactate thresholds (LT), repeated sprint performance tests (RSPT). It was hypothesized that chlorella supplementation would lower homeostatic disturbance during submaximal cycling which may lead to improvements in cycling performances.

Materials and methods

Participants

Initially eighteen participants were recruited however four were lost or did not meet the inclusion criteria (See Consort diagram in supplementary files). Therefore, fourteen trained healthy male experienced cyclists (Mean ± SD; Age 37 ± 8 years, Stature 184 ± 5 cm, Mass 78 ± 8 kg, average weekly self-reported kilometers/hours cycled 201.1 ± 67.0 km/8.5 ± 2.5 hrs, $\dot{V}O_{2max}$ 50.74 ± 5.69 ml·kg^{-1}·min^{-1}) completed the study. Participants were required to provide written informed consent, train at least 4-5 h per week and have a minimum of 2-years of cycling experience. The exclusion criteria were any cyclist that currently smoked or had a history of cardiovascular disease. The Faculty of Science, Engineering and Computing Ethics Committee at Kingston University London approved the study (1819.056.1) in accordance with the Declaration of Helsinki. The study followed the CONSORT and Good Clinical Practice guidelines. Considering the submaximal heart rate results (Effect size = 0.73, observed power =0.90) and power calculation from Gurney et al. (2021), a minimum sample size of eight was required to detect a medium effect (0.5) of chlorella supplementation in a *priori* power analysis using an alpha of .05 and a power of .90 (G*Power® software, version 3.1.9.7; Universität Kiel, Kiel, Germany (Faul et al. 2007)).

Study design

The study design and methodology closely follow those methods utilized in previous work (Gurney et al. 2021). Participants were required to visit the laboratory on six separate occasions at the same time of day (following an overnight fast) in a double-blinded randomized counter-balanced cross-over design. Participants were told to continue their regular training regime, and to refrain from taking any additional nutritional supplements during the intervention. 48 hrs prior to each visit, participants

were instructed to refrain from exercise and to record a food diary, this was replicated prior to each subsequent visit - adherence was 100%. Baseline anthropometric measurements, a $\dot{V}O_{2max}$ test, and familiarization of the testing protocols (Day 1) were conducted during visit one. During visit two, participants were accustomed to the exact same testing protocols which occurred on Day 2 following supplementation. Test-retest reliability, expressed as Coefficient of Variation % (CV%), for each performance test are the same values reported in our previous study (Gurney et al. 2021). For hemoglobin analysis, the HemoCue (AB Hb 201+, Ängelholm, Sweden) CV% was 1.2%.

Visit 1

Baseline measurements and $\dot{V}O_{2max}$. At the beginning of each visit, body mass (kg) and a 10 µL sample of capillary blood for hemoglobin (g/L) analysis were taken. Participants adjusted the Monark 894E Peak Bike to their preferred saddle height, which was recorded and replicated for subsequent tests. For the 16.1 km TT, participants used a TT bike (Boardman Bikes Ltd, London, UK) fixed on a Tacx Turbo Trainer (i-Genius T2020, Fisher Outdoor Leisure PLC UK) which was calibrated following the manufacturer's instructions prior to each trial. All tests required participants to be always sat on the saddle.

The $\dot{V}O_{2max}$ test comprised an initial 3-minute warm up period with no resistance (0 W) at a pace between 60 and 70 revolutions per minute ($r \cdot min^{-1}$). Each participant then started at 120 W, with 25 W increments every minute, participants were asked to cycle at exactly $80 r \cdot min^{-1}$ throughout the test. The test was terminated when cadence dropped by more than $10 r \cdot min^{-1}$ for more than 10-seconds despite strong verbal encouragement. Respiratory variables (RER, $\dot{V}O_2$, and CO_2) were measured continuously and averaged to 15-second intervals (Vyntus CPX; Vyaire Medical GmbH, Germany). Heart rate (HR) was recorded (Polar Electro Oy, Kempele, Finland) at every minute until volitional fatigue. The highest $\dot{V}O_2$ value that was recorded was determined as $\dot{V}O_{2max}$, whilst maximal external power output (W) was rounded down to the nearest incremental stage (Mean ± SD: 384 ± 60 W). Each participant's 55%Wmax relative intensity for the 1-hour submaximal endurance test were then calculated from these readings.

Familiarization (submaximal endurance test and 16.1 km TT). Prior to commencement, participants' 55% relative intensity was loaded onto the Monark 894E Peak Bike (Mean ± SD: 209 ± 33 W), they were then instructed to cycle at $80 r \cdot min^{-1}$ for 1-hour. Respiratory variables were recorded continuously, averaged over 15-seconds and then averaged over 20-minute intervals for data analysis. Heart rate and 20 µL capillary blood samples (glucose and lactate) were recorded and analyzed every 20-minutes (0, 20, 40, 60mins) (Biosen C-Line Sport, EKF diagnostic Sales GmbH, Ebendorfer Chaussee 3, Germany). Participants were then given a 5-minute rest period whereby water was consumed ad libitum (water consumption was recorded and standardized for the following visits) before starting the 16.1 km TT. During the TT, verbal encouragement was provided, and participants were blinded to all variables apart from distance elapsed. Cycling performance was executed at a freely

chosen cadence in order to complete the TT in the fastest time (seconds) possible. Oxygen consumption (ml·kg^{-1}·min^{-1}) and power output (Watts) were measured throughout and consequently averaged for total mean comparative data analysis. Capillary blood samples were also taken at every 4 km interval (4, 8, 12, 16 km).

Visit 2

Familiarization (lactate threshold test & repeated sprint performance test). An incremental test performed at a constant 80 r min^{-1} starting at 120 W, with 25 W increments every 3-minutes was utilized. Respiratory variables were recorded continuously and averaged over 15-seconds. Capillary blood samples and HR were collected at rest and in the final 30-seconds of each 3-minute stage. The test was terminated once the participant could no longer maintain a cadence of 80 r min^{-1} for more than 10-seconds. Power output and HR during the first 4-stages and at the calculated LT were compared across each condition. Lactate threshold was calculated by using the Dmax method in 'Lactate E' software (Newell et al. 2007).

After a 10-minute rest, each participant was instructed to complete 3 × 20 second all out sprints on the Peak Bike. The RSPT was designed in accordance with previous work employing the same protocol (Gurney et al. 2021). Briefly, a 5-minute warm up at 50 W (including 2 × 3 second warm up sprints) was followed by a 1-minute recovery before starting 3 × 20 second all out sprints. The RSPT was performed with a flying start against an applied fixed load of 8.5% body mass which automatically engaged once the participant cycled above 90 r min^{-1}. Participants were blinded to all variables during the test. In between each sprint, participants were given a 4-minute active recovery period at 50 W where water was consumed ad libitum. Capillary blood samples were taken (lactate and glucose) in the 2nd minute of each 4-minute recovery period. Average and peak power (W/kg), cadence (r min^{-1}), as well as fatigue indexes (Watts/sec & power drop %), were automatically recorded by the Peak Bike Monark software during each repeated sprint for analysis.

The first two visits were separated by 24 hrs, whereby participants completed the protocols in the exact same sequence as they would post supplement intervention. Participants were then randomly allocated to chlorella (Indigo Herbs Limited - nutritional composition can be seen in Table 1) or placebo (microcrystalline cellulose) and were instructed to ingest 6-grams (14 capsules: five with breakfast, five with lunch, four with dinner) each day for 21-days. This daily dosage is similar to previous work (Umemoto and Otsuki 2014; Zempo-Miyaki et al. 2017; Chidley and Davison 2018; Okada et al. 2018). The visually identical capsules were sealed within 21-small paper day bags and were coded by an independent lab technician. The morning after the 21-day supplementation, participants reported to the laboratory to begin their 2-day testing period (Visits 3 & 4). A minimum interval of 35-days (14-day wash out and the subsequent 21-day supplementation period) between the 4th and 5th visit was required before completing the exact same 2-day testing period (Visits 5 & 6). Participants failed to guess correctly which supplement they were on after the intervention, nor did they report any adverse gastrointestinal issues or taste differences. A schematic illustration of the protocol design can be seen in Figure 1.

Table 1. Nutritional composition of chlorella (100 g & 6 g).

	Per 100g	Per 6g
Energy	1448KJ/343Kcal	87KJ/21Kcal
Fat	7.8g	0.5g
Of which saturates	3.1g	0.2g
Carbohydrate	6.9g	0.4g
Of which sugars	1.6g	0.1g
Protein	61.3g	3.7g
Dietary Fiber	16.1g	1.0g
Salt	0.8 mg	0.05 mg
vitamin E	8.9 mg	0.5 mg
Vitamin B1	1.3 mg	0.1 mg
Vitamin B2	3.1 mg	0.2 mg
Vitamin B3	59.0 mg	3.5 mg
Vitamin B6	1.0 mg	0.06 mg
Folate	2.3 mg	0.1 mg
Biotin	0.1 mg	0.01 mg
Potassium	882.5 mg	53.0 mg
Calcium	330.0 mg	19.8 mg
Phosphorus	1210.0 mg	72.6 mg
Magnesium	360.0 mg	21.6 mg
Iron	210.0 mg	12.6 mg
Zinc	69.8 mg	4.2 mg
Carotenoids	945.0 mg	56.7 mg
Beta-cartene	229.0 mg	13.7 mg
Chlorophyll	3790.0 mg	227.4 mg
Chlorophyll-a	1749.0 mg	104.9 mg
Isoleucine	2300.0 mg	138.0 mg
Leucine	4700.0 mg	282.0 mg
Methionine	1300.0 mg	78.0 mg
Threoine	2400.0 mg	144.0 mg
Trypotophan	500.0 mg	30.0 mg
Valine	3200.0 mg	192.0 mg
Arginine	3300.0 mg	198.0 mg
Cystine	700.0 mg	42.0 mg
Histidine	1100.0 mg	66.0 mg
Tyrosine	2600.0 mg	156.0 mg
Lysine	3000.0 mg	180.0 mg
Alanine	4300.0 mg	258.0 mg
Aspartic Acid	4700.0 mg	282.0 mg
Glutamic Acid	5800.0 mg	348.0 mg
Glycine	3100.0 mg	186.0 mg
Proline	2400.0 mg	144.0 mg
Serine	2000.0 mg	120.0 mg
Phenylalanine	2777.0 mg	166.6 mg
Hydroxyproline	2500.0 mg	150.0 mg

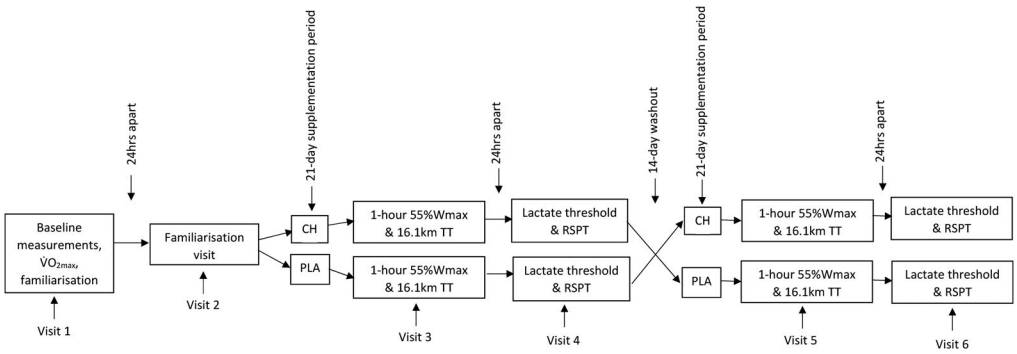

Figure 1. A Schematic illustration of the protocol design.

Statistics

Data are presented as mean ± SD. All statistical procedures were carried out using IBM SPSS version 26 for windows. All data sets were analyzed for normality using Shapiro Wilk, while Mauchly's test of Sphericity was employed to establish any potential violations. Any violation of sphericity was corrected by using values from the Greenhouse-Geisser. Statistical significance alpha level was set at ≤.05. Effect size (ES) calculated using Partial ETA squared SPSS output, Observed Power and 95% Confidence Intervals (95% CI) were used where appropriate. All variables from the 1-hour submaximal endurance test variables, RSPT, HR and lactate during the first 4 stages of the LT tests (using the Dmax method) and the lactate values from the 16.1 km TT were analyzed using a two-way within subjects repeated measures ANOVA with a Bonferroni correction for multiple comparisons to determine any differences. Hemoglobin, LT and 16.1 km TT variables were compared using a paired sample T-Test. Individual responses for the 16.1 km TT and RSPT were also analyzed and compared using the smallest worthwhile change, (0.6 × 3.9% (CV 16.1 km TT)) and (0.5 × 2.5% (CV RSPT)) (Paton and Hopkins 2006).

Results

1-hour submaximal endurance tests

Lactate

During the 1-hour submaximal endurance test, the blood lactate response was lower following chlorella supplementation (1.68 ± 0.50 mmol/L) compared to placebo (1.91 ± 0.65 mmol/L) ($p = 0.016$, ES= 0.37, Observed Power= 0.72). A significant effect for time and a condition*time interaction were detected ($p < 0.05$). Post Hoc tests revealed significantly lower blood lactate values between conditions during the last 20-minutes (Figure 2) ($p = 0.001$, 95% CI= −0.78 – 0.34).

Heart rate

During the 1-hour submaximal endurance test, HR was lower following chlorella supplementation (138 ± 11b·min^{-1}) when compared to placebo (144 ± 10b·min^{-1}) ($p = 0.001$, ES= 0.71, Observed Power= 0.91). A significant effect for time and a condition*time interaction were detected ($p < 0.05$). Post hoc tests reported placebo to yield significantly higher HR between conditions at each 20-minute time point (20-minutes: $p = 0.003$, 95% CI= 1.57 – 5.92, 40-minutes: $p = 0.001$, 95% CI= 3.62 – 8.79, 60-minutes: $p = 0.001$, 95% CI= 4.51 – 10.23, Figure 3A).

There was no effect of condition or time for: oxygen consumption (CH= 34.0 ± 3.9 ml·kg^{-1}·min^{-1} vs. placebo= 34.9 ± 5.5 ml·kg^{-1}·min^{-1}, $p = 0.186$, Figure 3B), RER (CH= 0.94 ± 0.03 vs. placebo= 0.94 ± 0.05, $p = 0.825$) and glucose (CH= 3.89 ± 0.63 mmol/L vs. placebo= 3.82 ± 0.57 mmol/L, $p = 0.563$), and no condition*time interaction during the 1-hour submaximal endurance tests ($p > 0.05$).

16.1 km TT

There was no difference in time to complete the 16.1 km TT between chlorella (1566 ± 132secs) and placebo (1584 ± 118secs) ($p = 0.335$, 95% CI= −20.81 – 56.81).

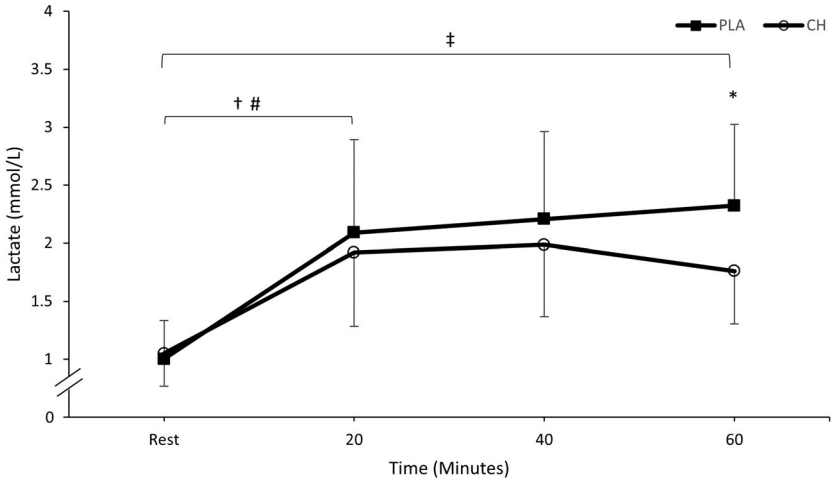

Figure 2. Lactate (mmol/L) during the 1-hour submaximal endurance test following the 21-day supplementation of chlorella or placebo. * signifies $p < 0.05$ between conditions. †# signifies both a chlorella (†) and placebo (#) within trial increase $p < 0.05$. ‡ signifies interaction effects at each 20-minute time point $p < 0.05$.

Individual percentage change and performance times can be seen in Figure 4. There was no effect of condition or time for: lactate ($p = 0.840$), glucose ($p = 0.256$), HR ($p = 0.663$), power output ($p = 0.594$) and oxygen consumption ($p = 0.556$) during the TT (Table 2), and no condition*time interaction ($p > 0.05$).

Lactate threshold (Dmax)

Heart rate and lactate during the first 4-stages (120 W, 145 W, 170 W, 195 W) were not significantly different between conditions ($p = 0.138$, 95% CI= −8.53 – 1.31 & $p = 0.672$, 95% CI= −.49 – .33, respectively). Power output (288 ± 41 W vs. 280 ± 43 W) and HR (144 ± 12b·min^{-1} vs. 150 ± 12b·min^{-1}) were not significantly different ($p = 0.201$, 95% CI= −20.36 – 4.71 & $p = 0.254$, 95% CI= −2.19 – 7.62) between chlorella or placebo at the calculated threshold, respectively.

RSPT

Peak power (W/kg)

Chlorella had a significant effect on PP (12.0 ± 1.2 W/kg) when compared to placebo (11.4 ± 1.4 W/kg) during the RPST ($p = 0.009$, ES= 0.42, Observed Power= 0.81). Post hoc tests reported CH to have a higher PP output between conditions during the 1st ($p = 0.035$, 95% CI = 0.05 – 1.14) and 3rd ($p = 0.009$, 95% CI= 0.18 – 1.08) sprint.

Average power (W/kg)

Chlorella had a significant effect on average power (AP) (9.5 ± 0.7 W/kg) when compared to placebo (9.0 ± 0.7 W/kg) ($p = 0.002$, ES= 0.51, Observed Power= 0.93). Post

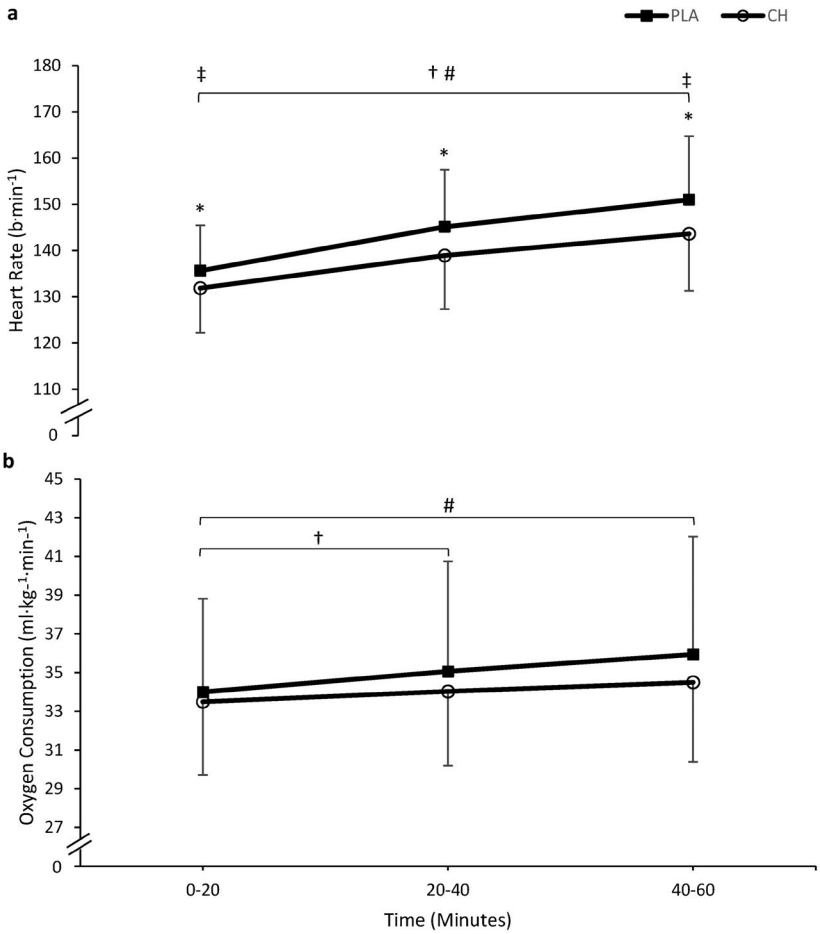

Figure 3. Heart rate (b·min^{-1}) (**a**) and oxygen consumption (ml·kg^{-1}·min^{-1}) (**b**) during the 1-hour submaximal endurance test following the 21-day supplementation of chlorella or placebo. * signifies $p < 0.05$ between conditions. †# signifies both a chlorella (†) and placebo (#) within trial increase $p < 0.05$. ‡ signifies interaction effects ($p < 0.05$) from the first 20 to final 20-minutes.

hoc tests reported CH to produce a higher AP output at each RPST bout (1st: $p = 0.003$, 95% CI= 0.20 – 0.81, 2nd: $p = 0.019$, 95% CI= 0.72 – 0.68, 3rd: $p = 0.001$, 95% CI= 0.25 – 0.82). There was a significant effect detected across time in both PP and AP ($p < 0.05$). No condition*sprint interaction was detected in both power outputs ($p > 0.05$). There was no effect of condition or time for (CH vs. Placebo): Watts/Second (20 ± 6 vs. 21 ± 6, $p = 0.561$), power drop % (42 ± 9 vs. 43 ± 9, $p = 0.630$), cadence (143 ± 15 r min^{-1} vs.139 ± 18 r min^{-1}, $p = 0.160$), lactate (10.13 ± 2.41 mmol/L vs. 10.34 ± 2.75 mmol/L, $p = 0.732$), and glucose (4.36 ± 0.74 mmol/L vs. 4.42 ± 0.82 mmol/L, $p = 0.897$), and no condition*time interaction during the RSPT.

Hemoglobin

Chlorella (149.3 ± 10.3 g/L) elicited a small but significant increase in Hb ($p = 0.05$, 95% CI= 0.21 – 12.34) in comparison to placebo (143.3 ± 8.7 g/L).

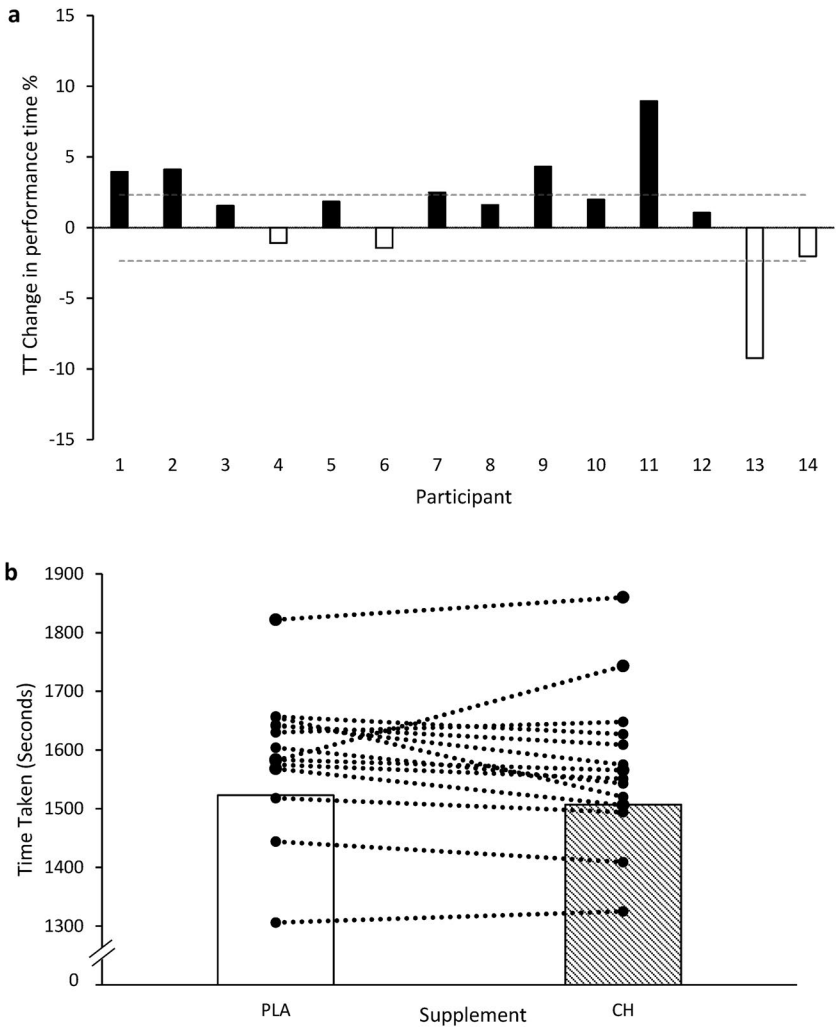

Figure 4. Participant percentage change in performance (%) between placebo and chlorella during the 16.1 km TT (**a**). the dotted grey lines indicate the smallest worthwhile change in performance. Average and individual performance time (secs) (**b**).

Table 2. Mean ± SD for performance variables measured across the 16.1 km TT.

	Placebo ($n = 14$)	Chlorella ($n = 14$)
Heart rate (b·min^{-1})	162 ± 11	160 ± 12
Power output (Watts)	298 ± 18	303 ± 21
$\dot{V}O_2$ (ml·kg^{-1}·min^{-1})	41.49 ± 7.20	40.79 ± 7.25
Time (seconds)	1584 ± 118	1566 ± 132
Lactate (mmol/L)	5.28 ± 1.61	5.16 ± 1.69
Glucose (mmol/L)	3.53 ± 0.86	3.79 ± 0.87

Discussion

This is the first study to compare key physiological responses in trained cyclists during a submaximal endurance test, 16.1 km time trial, LT and RSPT after a 6 g/day

supplementation of CH for 21-days. The novelty of our results lies in the key findings; chiefly, chlorella supplementation resulted in a markedly improved relative power output during RSPTs, and significantly decreased lactate response during submaximal exercise intensities (Figure 2) and HR (Figure 3A). Collectively, these findings are similar to that of a previous study that investigated another popular microalgae (spirulina) with similar nutritional qualities (Gurney et al. 2021). Despite this, there are some differences in which constituents found in chlorella might also be contributing to any ergogenic aid benefit, which we discuss in further detail below.

Both average power and peak power (Figure 5) after the supplementation of chlorella yielded an average 5.4% improvement. Previous investigations have reported chlorella to be efficacious at improving maximal exercise bouts such as VO_{2max} in humans (Umemoto and Otsuki 2014; Zempo-Miyaki et al. 2017) and maximal swimming bouts in rodents (Mizoguchi et al. 2011; Horii et al. 2017). Indeed, cyclists depend on the ability to produce short high intensity repetitive sprints whereby having a high relative power output is essential for a successful performance (Kordi et al. 2020; 2020). Considering previous research has reported that neuromuscular and morphological changes are associated with improvements in PP performance (Dorel et al. 2005), and that our data demonstrated that cadence at the calculated PP was not significantly different between conditions, indicates that torque increased (Kordi et al. 2020) after chlorella supplementation. Mechanistically, the authors have limited comprehension to the exact constituents found in chlorella causing these findings due to the current

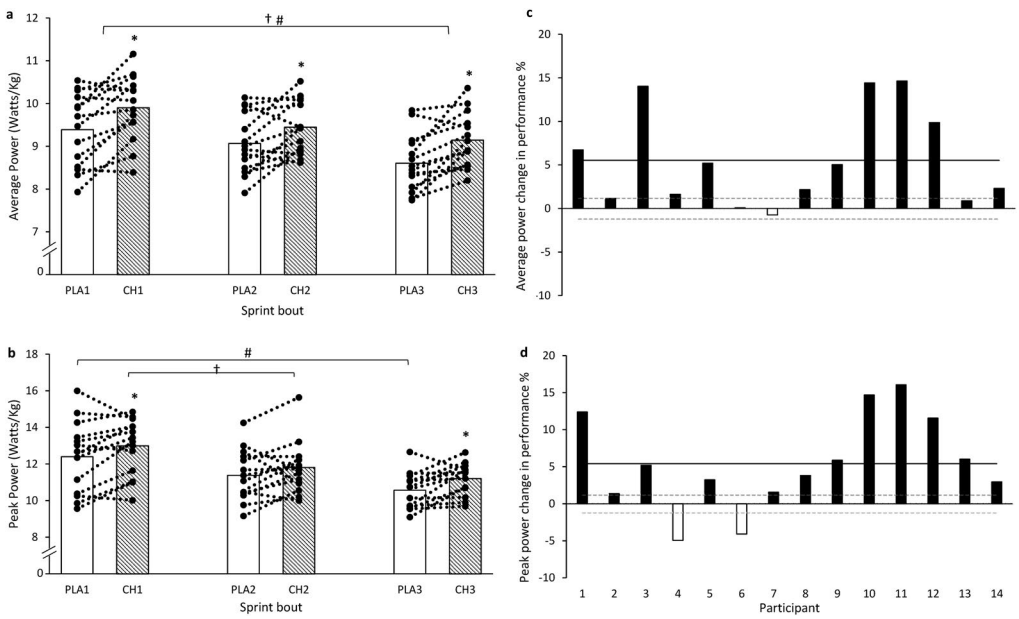

Figure 5. Average power (**a**) and peak power (**b**) (watts/kg), mean ± SD of each repeated sprint performance test following the 21-day supplementation of chlorella or placebo. * signifies $p < 0.05$. †# signifies both a chlorella (†) and placebo (#) within trial increase $p < 0.05$. Individual average (**c**) and peak power performance percentage change (**d**) between placebo and chlorella. The dotted grey lines indicate the smallest worthwhile change in performance. The solid black line indicates the group mean.

novelty of chlorella supplementation research, and this despite previous authors also reporting that chlorella supplementation improves high intensity exercise (Umemoto and Otsuki 2014; Zempo-Miyaki et al. 2017; Sanayei et al. 2021). Repeated sprinting with long recovery phases, such as the 4-minutes used in the present study, typically increases aerobic metabolism contribution (as much as 40%) during final sprint bouts with some athletes even reaching their $\dot{V}O_{2max}$ (Girard et al. 2011). Consequently, researchers have suggested that during the latter sprints, a greater aerobic contribution (by improving ones $\dot{V}O_{2max}$) may minimize fatigue. Given that chlorella supplementation has previously improved aerobic capacity (Umemoto and Otsuki 2014; Zempo-Miyaki et al. 2017; Sanayei et al. 2021) this could partly explain the increases in both PP and AP during the final sprint bout (Figure 5). These results could be owed to improvements in nutritional status (Umemoto and Otsuki 2014; Gurney and Spendiff 2022), or chlorella's anti-oxidant/inflammatory properties (Samadi et al. 2020). Despite little mechanistic evidence to support such findings, this applied performance data provides further evidence in the possible efficacy of chlorella supplementation and a foot hold for other researchers to explore and confirm the mechanisms.

Chlorella supplementation also reduced cardiac demand and lactate during submaximal cycling (Figures 2 and 3A/B). Chlorella has previously been reported to reduce arterial stiffness in young males, with the authors initially postulating their vasodilatory mechanistic findings to possible increases in NO production and bioavailability, believed to be derived from the arginine content in chlorella (Otsuki et al. 2013; Umemoto and Otsuki 2014). This speculation in the increase of NO production following 6 g/day chlorella supplementation was consequently confirmed by Otsuki *et al.* (Otsuki et al. 2015) who demonstrated that changes in arterial stiffness were correlated with increases in plasma nitrate/nitrite after four weeks. The ergogenic benefits of elevated nitrate/nitrite on exercise performance are reviewed elsewhere (Pawlak-Chaouch et al. 2016), but briefly vasodilation derived from elevations in NO throughout the vasculature can facilitate an increased blood flow which therefore provides the working skeletal muscle with an increased peripheral oxygen offload and aid in the delivery/removal of key metabolites (Seeley et al. 2020), possibly allowing submaximal exercise bouts to be performed with a lower homeostatic disturbance (Figure 3A/B). Although arterial stiffness, blood pressure, and nitrate/nitrites mechanistic data collection were omitted due to being beyond the resources available for the current study, the homeostatic results from the submaximal cycle, coupled with the final repeated sprint bout, are further supportive that chlorella supplementation can improve aerobic capacity (Umemoto and Otsuki 2014; Zempo-Miyaki et al. 2017). Importantly though, previous research on whether arginine itself may augment NO production (Álvares et al. 2012) and therefore positively affect aerobic exercise in healthy subjects is conflicting (Meirelles et al. 2019). Particularly as in the current study and previous chlorella supplementation studies (Otsuki et al. 2013; Umemoto and Otsuki 2014; Otsuki et al. 2015; Zempo-Miyaki et al. 2017) the daily intake of arginine was only 198 mg and 189 mg, respectively. Rather, it could be the combined consumption of bioactive properties found in chlorella such as PUFAs, glycoproteins, linoleic acid, antioxidants, and water-soluble fibers (Otsuki et al. 2013; Fallah et al. 2018) contributing to such improvements. It is therefore apparent that there are some conflicting mechanistic suggestions yet conversely there appears to be some uniformity in chlorella increasing nitrite/nitrate (Otsuki et al. 2015; Fujie et al. 2021).

To the best of our knowledge, this is the first study to investigate the influences of chlorella supplementation on lactate levels during exercise in humans. Recent reviews have reported that lactate is indeed a major fuel for mitochondrial respiration (Glancy et al. 2021). Lactate clearance capacity is often utilized as the gold standard for monitoring athlete training status (San-Millán et al. 2020). As such, if a lower lactate response is observed at the same given work rate (as observed in the current study – Figure 2). This may suggest an enhanced lactate metabolism and aerobic capacity. This is consistent with previous research in rodents where lower lactate concentrations were reported in the liver and muscle following chlorella supplementation (Mizoguchi et al. 2011; Horii et al. 2017). Horii *et al.* (Horii et al. 2017) demonstrated an enhanced MCT expression, lactate dehydrogenase activity, and proliferator-activated receptor ϒ coactivator-1α (PGC-1α) in rodents, key enzymes associated with lactate transport/metabolism, energy metabolism, and mitochondrial biogenesis (Brooks 2018; 2020). Consequently, these key adaptations will permit a lower lactate accumulation during exercise (Glancy et al. 2021), as observed by Horii and colleagues. Despite measurement and confirmation of increases in PGC-1α and MCT being beyond the scope of this study, increases in PGC-1α following chlorella supplementation have been translated and supported in a recent human study. Sanayei *et al.* (Sanayei et al. 2021) reported marginal increases in PGC-1α after supplementing obese women with chlorella (2.7 g/day) combined with high-intensity interval training (3-sessions per week) for 8-weeks. Niacin, arginine, antioxidant properties of carotenoids, polyphenolic properties were the purported mechanistic constituents derived from chlorella contributed to these positive findings. It is evident that multiple constituents of chlorella may be acting concomitantly after supplementation, making true conclusive interpretation limited.

No differences were observed during the 16.1 km TT. Despite a 1.2% improvement in time, this variation typically falls within the expected race-race variation in road TTs (Paton and Hopkins 2006). Indeed, analysis of individual percentage change (Figure 4) revealed that only five participants improved their performance time above the calculated smallest worthwhile change. Further, the 16.1 km TT was performed at a substantially higher intensity and time above the calculated LT (Table 1 & LT results), considering results from previous research and the current study, the ergogenic effects of chlorella may only be seen during shorter, high intensity and intermittent exercise modalities (Umemoto and Otsuki 2014; Zempo-Miyaki et al. 2017) and during intensities closer to the threshold which may explain the lack of significance. For example, during the first 4-lower-stages of the LT test, chlorella supplementation resulted in no differences in the blood lactate response. This data also supports our findings from the 1-hour submaximal test (207 W, −81 W below the calculated average lactate threshold when using the Dmax method) where during the first 40-minutes of steady state submaximal cycling there were no differences in lactate. Equally, at intensities much higher than the threshold (RSPT) chlorella also had no effect on lactate. However, during the latter end of the 1-hour submaximal test, where HR values were similar to the calculated threshold ($144 \pm 12 b \cdot min^{-1}$) a significant difference in lactate occurred. These findings are perhaps indicative that there may be a specific intensity whereby chlorella supplementation in trained cyclists may exhibit improvements in metabolic perturbation. The non-significant results during the 16.1 km TT are also similar to the previous paper in spirulina (Gurney

et al. 2021). Currently the literature on chlorella's influence on lactate metabolism in humans is sparse, thus making conclusive comparisons from previous research difficult. However, Horii *et al.* (Horii et al. 2017) demonstrated that chlorella supplementation in rats is most effective at influencing lactate metabolism whilst employing a high intensity training programme rather than supplementation alone. To elucidate why this might be, future research should consider the possibility of supplementing chlorella alongside a controlled training programme whilst comparing LTs in humans. It's also important to consider a key limitation to our LT test as it was completed on the second day of testing, 24 hrs after fatiguing exercise, therefore our findings might not necessarily be translatable or ecologically valid due to the majority of cyclists usually completing a LT in a fresh state.

Based on the literature to date, this may be the first study to demonstrate a small positive hemopoietic trend following chlorella supplementation in trained males. It could be argued that the negligible, yet significant, 4% improvement in Hb following chlorella supplementation in comparison to placebo may have also had a small influence on exercise performance parameters in this study. The CV% for this variable was 1.2% and the smallest worthwhile change in Hb was calculated at being 2.06 g/L (0.2 X STD of chlorella (10.3 g/L) (Hopkins 2000). Overall, there was a 6 g/L increase from placebo to chlorella, which according to previous literature may equate to a 2% improvement in oxygen-carrying capacity in the blood (Otto et al. 2013). Indeed, although not significant, there was a 2.5% reduction in the demand for oxygen following chlorella supplementation (34.0 ± 3.9 ml·kg^{-1}·min^{-1}) in comparison to placebo (34.9 ± 5.5 ml·kg^{-1}·min^{-1}) during the submaximal cycling test. These findings in turn, may support how chlorella supplementation has previously improved maximal oxygen uptake (Umemoto and Otsuki 2014; Zempo-Miyaki et al. 2017) and exhibited lower homeostatic disturbances during submaximal cycling in the current study (lower lactate (Figure 2) and HR (Figure 3). It's plausible to suggest that the iron content, combined with the folate found in chlorella contributed to this small change in Hb after supplementation (Nakano et al. 2010).

This study acknowledges several key limitations and therefore interpretation of the results should come with caution. Firstly, the primary aim of this study was to solely focus on cycling performance parameters following chlorella supplementation, mechanistic results to support such findings are therefore missing. Further mechanistic research is warranted to explore the speculations, as currently conclusive interpretation of the results is limited. Secondly, although we controlled for food intake prior to testing day 1, we did not account for individual food and recovery strategies the 24 hrs in between testing day 1 and 2. Additionally, we asked participants to consume the capsules with each meal per day throughout the intervention, as we did not assess individual food/eating habits, there may have been disparities in the timing/omission of meal consumption throughout the day. There may also be possible interactions with certain food stuffs which may influence the bioavailability/absorption of the micronutrients in microalgae (Koyande et al. 2019), understanding of which is currently unknown. Thirdly, the 16.1 km TT may limit the applicability of the results as it may be considered a relatively short 'sprint-like' distance for experienced cyclists, it is unknown as to whether a longer endurance distance (such as 50+ km) would derive the same results. Finally, while participants in the current study were considered fit healthy men who train regularly, prior and post analysis of their nutritional status was

not conducted. We also acknowledge that third-party independent nutrient analysis was not conducted on the chlorella supplement.

Collectively, the novel findings of this study indicate that 6 g/day chlorella supplementation for 21-days can significantly improve relative power during RSPTs (Figure 5) and allow submaximal exercise to be performed with lower homeostatic disturbances. Conversely, chlorella does not improve 16.1 km TT and LT's. Chlorella may therefore pose as an additional supplement for cyclists to consider, particularly for those cyclists who want to improve their sprinting.

Author contribution

The study was designed by T. Gurney, J. Brouner and O. Spendiff; data were collected by T. Gurney; data were analyzed by T. Gurney; data interpretation and manuscript preparation were undertaken by T. Gurney, J. Brouner and O. Spendiff. All authors approved the final version of the paper.

Disclosure statement

No potential conflict of interest was reported by the authors.

Ethical approval

The authors declare that the results of the study are presented clearly, honestly, and without fabrication, falsification or inappropriate data manipulation in any way to intentionally portray anything but those outcomes that were observed. The Faculty of Science, Engineering and Computing Ethics Committee at Kingston University London approved the study in accordance to the Helsinki Declaration. All participants completed informed consent before participating in the study.

About the authors

Tom Gurney is in the final stages of his PhD at Kingston University and is a lecturer at University College London. His research interests are supplementation for exercise and health.

James Brouner is the course director for both the Sport Science BSc (Hons) and Sport Science (Coaching) BSc (Hons) at Kingston University. His PhD focused on compensatory mechanisms due to localised fatigue of the lower limb. James' main research interests are performance analysis in both team and individual sport, biomechanical analysis of fatigue, optimal nutritional strategies for endurance sport and the biomechanics of dance science.

Owen Spendiff is Head of the Department of Applied and Human Sciences at Kingston University. He holds a PhD in Sport Nutrition and has supervised numerous sport PhD students to completion. Owen's research is very much focussed on sport and health sciences with recent PhD projects examining High Flavanol Dark Chocolates and also different algae such as Spirulina and Chlorella analysing their effects on oxygen consumption and performance. Owen is also very active in researching low carbohydrate/ketogenic diets for health, exercise and performance.

Funding

The author(s) reported there is no funding associated with the work featured in this article.

ORCID

Tom Gurney http://orcid.org/0000-0002-2490-2960

References

Álvares TS, Conte CA, Jr, Paschoalin VMF, Silva JT, CdM M, Bhambhani YN, et al. 2012. Acute l-arginine supplementation increases muscle blood volume but not strength performance. Appl Physiol Nutr Metabol. 37(1):115–126.

Andrade LM, Andrade CJ, Dias M, Nascimento C, Mendes MA. 2018. Chlorella and spirulina microalgae as sources of functional foods. Nutraceuticals, and Food Supplements. 6(1):45–58.

Bell PG, Furber MJ, Van Someren KA, Solanas Anton, Swart A. 2017. The physiological profile of a multiple Tour de France winning cyclist. Med Sci Sports & Exercise. 49(1):115–123.

Brooks GA. 2018. The science and translation of lactate shuttle theory. Cell Metabolism. 27(4):757–785.

Brooks GA. 2020. Lactate as a fulcrum of metabolism. Redox Biol. 35:101454.

Chidley C, Davison G. 2018. The effect of Chlorella pyrenoidosa supplementation on immune responses to 2 days of intensified training. Eur J Nutr. 57(7):2529–2536.

Dorel S, Hautier CA, Rambaud O, Rouffet D, Van Praagh E, Lacour J, et al. 2005. Torque and power-velocity relationships in cycling: relevance to track sprint performance in world-class cyclists. Int J Sports Med. 26(9):739–746.

Fallah AA, Sarmast E, Habibian Dehkordi S, Engardeh J, Mahmoodnia L, Khaledifar A, Jafari T. 2018. Effect of Chlorella supplementation on cardiovascular risk factors: A meta-analysis of randomized controlled trials. Clin Nutr. 37(6 Pt A):1892–1901.

Faul F, Erdfelder E, LA, Buchner, A, G. 2007. Power 3: A flexible statistical power analysis program for the social, behavioral, and biomedical sciences. Behav Res Methods. 39(2):175–191.

Fujie S, Hasegawa N, Horii N, Inoue K, Uchida M, Iemitsu M. 2021. Effects of combined exercise training and Chlorella intake on vasorelaxation mediated by nitric oxide in aged mice. Appl Physiol Nutr Metabol. 46(5):479–484.

Gao F, Guo W, Zeng M, Feng Y, Feng G. 2019. Effect of microalgae as iron supplements on iron-deficiency anemia in rats. Food & Function. 10(2):723–732.

Girard O, Mendez-Villanueva A, Bishop D. 2011. Repeated-sprint ability—Part I. Sports Med. 41(8):673–694.

Glancy B, Kane DA, Kavazis AN, Goodwin ML, Willis WT, Gladden LB. 2021. Mitochondrial lactate metabolism: history and implications for exercise and disease. J Physiol (Lond). 599(3):863–888.

Gurney T, Brouner J, Spendiff O. 2021. Twenty-one days of spirulina supplementation lowers heart rate during submaximal cycling and augments power output during repeated sprints in trained cyclists. Appl Physiol Nutr Metabolism. 47(1):18–26.

Gurney T, Spendiff O. 2022. Algae supplementation for exercise performance: current perspectives and future directions for spirulina and chlorella. Front Nutr. 9:384.

Hopkins WG. 2000. Measures of reliability in sports medicine and science. Sports Med. 30(1):1–15.

Horii N, Hasegawa N, Fujie S, Uchida M, Miyamoto-Mikami E, Hashimoto T, et al. 2017. High-intensity intermittent exercise training with chlorella intake accelerates exercise performance and muscle glycolytic and oxidative capacity in rats. Am J Physiol-Regulatory, Integrativ Compar Physiology. 312(4):R520–R528.

Kordi M, Folland J, Goodall S, Haralabidis N, Maden-Wilkinson T, S, Patel T, et al. 2020. Mechanical and morphological determinants of peak power output in elite cyclists. Scand J Med Sci Sports. 30(2):227–237.

Kordi M, Folland JP, Goodall S, Menzies C, Patel TS, Evans M, et al. 2020. Cycling-specific isometric resistance training improves peak power output in elite sprint cyclists. Scand J Med Sci Sports. 30(9):1594–1604.

Koyande AK, Chew KW, Rambabu K, Tao Y, Chu D, Show P. 2019. Microalgae: A potential alternative to health supplementation for humans. Food Sci Human Wellness. 8(1):16–24.

Meirelles CM, Matsuura C, Silva RS, JrGuimarães FF, Gomes PSC. 2019. Acute effects of L-Arginine supplementation on oxygen consumption kinetics and muscle oxyhemoglobin and deoxyhemoglobin during treadmill running in male adults. Int J Exerc Sci. 12(2):444.

Mizoguchi T, Arakawa Y, Kobayashi M, Fujishima M. 2011. Influence of Chlorella powder intake during swimming stress in mice. Biochem Biophys Res Commun. 404(1):121–126.

Nakano S, Takekoshi H, Nakano M. 2010. Chlorella pyrenoidosa supplementation reduces the risk of anemia, proteinuria and edema in pregnant women. Plant Foods for Human Nutr. 65(1):25–30.

Newell J, Higgins D, Madden N, Cruickshank J, Einbeck J, McMillan K, et al. 2007. Software for calculating blood lactate endurance markers. J Sports Sci. 25(12):1403–1409.

Okada H, Yoshida N, Kakuma T, Toyomasu K. 2018. Effect of Chlorella ingestion on oxidative stress and fatigue symptoms in healthy men. Kurume Med J. 64(4):83–90.

Otsuki T, Shimizu K, Iemitsu M, Kono I. 2011. Salivary secretory immunoglobulin A secretion increases after 4-weeks ingestion of chlorella-derived multicomponent supplement in humans: a randomized cross over study. Nutrition J. 10(1):1–5.

Otsuki T, Shimizu K, Iemitsu M, Kono I. 2013. Multicomponent supplement containing Chlorella decreases arterial stiffness in healthy young men. J Clin Biochem Nutr. 53(3):166–169.

Otsuki T, Shimizu K, Maeda S. 2015. Changes in arterial stiffness and nitric oxide production with Chlorella-derived multicomponent supplementation in middle-aged and older individuals. J Clin Biochem Nutr. 57(3):228–232.

Otto JM, Montgomery HE, Richards T. 2013. Haemoglobin concentration and mass as determinants of exercise performance and of surgical outcome. Extreme Physiol Med. 2(1):1–8.

Paton CD, Hopkins WG. 2006. Variation in performance of elite cyclists from race to race. Eur J Sport Sci. 6(01):25–31.

Pawlak-Chaouch M, Boissiere J, Gamelin FX, Cuvelier G, Berthoin S, Aucouturier J. 2016. Effect of dietary nitrate supplementation on metabolic rate during rest and exercise in human: a systematic review and a meta-analysis. Nitric Oxide. 53:65–76.

Samadi M, Shirvani H, Shafeie AA. 2020. Effect of Chlorella vulgaris supplementation with eccentric exercise on serum interleukin 6 and insulin resistance in overweight men. Sport Sci Health. 16(3):543–549.

Sanayei M, Hajizadeh-Sharafabad F, Amirsasan R, Barzegar A. 2021. High-intensity interval training with or without chlorella vulgaris supplementation in obese and overweight women: effects on mitochondrial biogenesis, performance and body composition. Br J Nutr. 128(2): 200–210.

San-Millán I, Stefanoni D, Martinez JL, Hansen KC, D'Alessandro, A, Nemkov. 2020. T. Metabolomics of endurance capacity in world tour professional cyclists. Front Physiol. (11):578.

Seeley AD, Jacobs KA, Signorile JF. 2020. Acute soy supplementation improves 20-km time trial performance, power, and speed. Med Sci Sports Exerc. 52:170–177.

Sherafati N, Bideshki MV, Behzadi M, Mobarak S, Asadi M, Sadeghi O. 2022. Effect of supplementation with Chlorella vulgaris on lipid profile in adults: a systematic review and dose-response meta-analysis of randomized controlled trials. Complement Ther Med. (66):102822.

Umemoto S, Otsuki T. 2014. Chlorella-derived multicomponent supplementation increases aerobic endurance capacity in young individuals. J Clin Biochem Nutr. 55(2):143–146.

Wells ML, Potin P, Craigie JS, Raven JA, Merchant SS, Helliwell KE, Smith AG, Camire ME, Brawley SH. 2017. Algae as nutritional and functional food sources: revisiting our understanding. J Appl Phycol. 29(2):949–982.

Zempo-Miyaki A, Maeda S, Otsuki T. 2017. Effect of Chlorella-derived multicomponent supplementation on maximal oxygen uptake and serum vitamin B 2 concentration in young men. J Clin Biochem Nutr. 61(2):135–139.