Advanced control strategies for bioprocess chromatography: challenges and opportunities for intensified processes and next generation products

Alexander Armstrong[1,^], Kieran Horry[1,^], Tingting Cui[2], Martyn Hulley[2], Richard Turner[2], Suzanne S. Farid[1], Stephen Goldrick[1,*], and Daniel G. Bracewell[1,*]

[1] The Advanced Centre of Biochemical Engineering, Department of Biochemical Engineering, University College London, Bernard Katz Building, Gower Street, London, WC1E 6BT, UK.
[2] Purification Process Sciences, Biopharmaceuticals Development, R&D, AstraZeneca, Cambridge, UK

[*] Correspondence: d.bracewell@ucl.ac.uk; Tel.: +44 (0) 20 7679 9580
Correspondence: s.goldrick@ucl.ac.uk

[^] Both authors contributed equally to this work

Conflicts of Interest: "The authors declare no conflict of interest."

Abstract

Recent advances in process analytical technologies and modelling techniques present opportunities to improve industrial chromatography control strategies to enhance process robustness, increase productivity and move towards real-time release testing. This paper provides a critical overview of batch and continuous industrial chromatography control systems for therapeutic protein purification. Firstly, the limitations of conventional industrial fractionation control strategies using in-line UV spectroscopy and on-line HPLC are outlined. Following this, an evaluation of monitoring and control techniques showing promise within research, process development and manufacturing is provided. These novel control strategies combine rapid in-line data capture (e.g. NIR, MALS and variable pathlength UV) with enhanced process understanding obtained from mechanistic and empirical modelling techniques. Finally, a summary of the future states of industrial chromatography control systems is proposed, including strategies to control buffer formulation, product fractionation, column switching and column fouling. The implementation of these control systems improves process capabilities to fulfil product quality criteria as processes are scaled, transferred and operated, thus fast tracking the delivery of new medicines to market.

Keywords: process control, biopharmaceuticals, mechanistic modelling, process intensification, process analytical technology, real-time release testing

1. Introduction

The biopharmaceutical industry, currently dominated by therapeutic proteins, has grown rapidly since its inception while the portfolio of products has increased in complexity and diversity [1,2]. Concerns for the sector's future highlight rising development costs and manufacturing challenges, in addition to competition from biosimilars [3–5]. To ensure continual quality improvements and bring these complex therapeutic proteins faster to the market, companies have been driven to innovate by accelerating process development, reduce operational and capital expenses (OPEX and CAPEX), and move towards the goal of real-time release testing [6,7]. A key aspect in the manufacture of these therapeutic proteins is downstream processing where chromatography is typically the core purification technology [8]. Process optimisation and control of chromatography steps can contribute to more consistent product quality, better management of process variability, and cost reductions. However, the current implementation of chromatography control strategies in industry is limited and rudimentary, leading to processes operating sub-optimally in addition to delays in purification process development for new molecules. Therefore, a critical overview of the breadth of monitoring and control techniques is presented and possible future states of chromatography control that will pave the way towards greater process intensification are proposed.

The key questions that will be tackled in this review of current and future industrial chromatography control strategies are:

- What are the current standard buffer and fractionation control strategies in industrial chromatography?
- What novel process analytical technologies (PATs) and control strategies have been published?
- What are the benefits and issues of the novel PATs and control strategies described?
- What will be the likely future state of industrial therapeutic protein chromatography control systems to meet the challenges of increasing product complexity?

Process intensification was first pioneered as a way to reduce capital costs by the UK based Imperial Chemical Industries (ICI) in the late 1970s [9]. While it has since seen significant interest and application in the biopharmaceutical industry, the definition of process intensification has been vague and sometimes contradictory [10–13]. For the purposes of this review, process intensification is defined as any technology or strategy that increases the efficiency of one or more unit operations, leading to increased intermediate/final product purity and/or yield per unit volume, process time, and/or expense, resulting in reduced plant

footprints. In this manner, process intensification results in more efficient processes that meet regulatory requirements.

To tackle the growing expenses and demands of the biopharmaceutical industry, key regulatory agencies have pushed in recent decades to improve and modernise the biopharmaceutical industry. A key element of this is the “Quality by Design” (QbD) initiative, first developed by Dr. Joseph M. Juran [14]. QbD is an approach to development, based on quality planning, quality control, and quality improvements. Since its inception, it has been identified as a key design strategy by The International Council for Harmonisation of Technical Requirements for Pharmaceuticals for Human Use (ICH) guideline Q8, resulting in a continuous push by regulators for its implementation [15,16].

The QbD process requires the development of an overall control strategy, within which relevant critical quality attributes (CQAs) are identified along with their acceptable operating ranges [17]. The critical process parameters (CPPs) that directly impact the pertinent CQAs are also identified. A QbD control strategy can require monitoring of the CQAs and manipulation of the CPPs in response to the process changes to maintain the process within the established design space. Table 1 details potential CPPs, CQAs and performance attributes relevant to process chromatography for the purification of therapeutic proteins. The pertinent CQAs and CPPs are identified via risk assessment during process development, and vary depending on the chromatography process in question. For example, a Protein A capture step may have fewer and less-stringent CQAs than a polishing ion-exchange step where the product stream is nearing the final product composition. Performance attributes, such as product yield and process productivity, are not classed as CQAs as they do not directly affect the safety or efficacy of the final product. However, they remain vitally important to assuring a feasible manufacturing process, and so relevant process parameters influencing the performance attributes also require identification to enable their control [18,19].

Furthermore, the “Pharmaceutical Current Good Manufacturing Practices (cGMPs) for the 21st Century—a Risk Based Approach,” is an initiative announced by the FDA in August of 2002 to improve and modernise pharmaceutical manufacturing [20]. A vital element of the initiative is to encourage companies to adopt PAT for monitoring and control of processes, resulting in continuous real-time quality assurance. The utilisation of PAT plays a role in meeting the goals of the QbD design approach by monitoring the identified CQAs and manipulating the corresponding CPPs. For these reasons, a major focus in industry has been to improve the process efficiency and robustness of chromatography through the implementation of process monitoring and control using PAT.

However, while the ability of these PAT to monitor processes has been demonstrated in research and process development, the number of demonstrated implementations of control strategies utilising PAT is significantly lower [21–24]. This indicates a gap in meeting all the objectives of the FDA initiative. For industrial chromatography processes, these gaps exist due to the additional obstacles for PAT and process control implementation present in therapeutic protein chromatography when compared to small molecule chromatography. The first of these obstacles is the presence of product-related impurities including DNA and a variety of host cell proteins which must be reduced to nominal levels in the final product. Second, the similar binding affinities between the product and its aggregates, fragments, and dimers/monomers make their separation from the product challenging. Third, the difficulty in differentiating between product and product-related impurities using current PAT monitoring strategies means additional time and expenses are generated from retrospective off-line quality checks. Fourth, the wide variety of therapeutic proteins with different chemical compositions and configurations requires the development of individual control strategies for each product leading to long process development times [21–23].

These obstacles make accurate real-time measurements of therapeutic protein quantity and purity using traditional monitoring methods challenging. As a result, currently implemented chromatography control strategies in industry are relatively limited, reducing the process robustness and efficiency that can be achieved. Advanced control strategies could reduce expenses by decreasing buffer and material requirements, and intensifying chromatography steps resulting in processes with higher productivities that may lead to more robust processes with a smaller plant footprint.

Improved process control is also a key element in the move towards real-time release testing (RTRT) [25]. For biologics, RTRT is an alternative approach to standard product testing at the end of production, on the basis that the manufacturer can demonstrate that product quality is maintained based on real-time process data [26]. Strategies for the implementation of RTRT across biologic manufacturing can be found in the literature [25], and in published guidance from US and European pharmaceutical regulators [26–28]. The potential benefits of RTRT founded on advanced process control and PAT implementation include increased quality assurance, shorter production timelines, reduced OPEX and less dependence on retrospective end-product testing. These advanced systems require the use of multivariate data analysis (MVDA), mechanistic modelling, and in-line or automated on-line technologies to rapidly monitor and predict the process attributes in real time.

This review begins by highlighting the current buffer and fractionation control strategies used in industrial chromatography and identifies their limitations. This is followed by a deep dive

into literature for novel chromatography control strategies, starting with experimentally demonstrated spectroscopy-based soft sensors utilised in chromatography control strategies. The demonstrated and potential application of mechanistic modelling, PID controllers and model predictive control to industrial chromatography control are then further discussed, including the pros and cons of each strategy. Finally, a future perspective on advanced chromatography control systems and technologies is presented.

2. Current industrial chromatography control systems

The biopharmaceutical industry employs several monitoring and control technologies to ensure that chromatography systems operate safely, and that the product obtained meets the required specifications. In process chromatography there are two main areas for control: controlling the conditions of the column feed and controlling the purity and yield of the product. In this review, these areas are referred to as buffer control and fractionation control respectively. Currently available and industrially proven control technologies applied in both areas are detailed in the following two sections. A summary of the techniques discussed is provided in Table 2.

2.1. Buffer control systems

At industrial scale, protein purification can require thousands of litres of buffer weekly and a multitude of different buffer formulations per unit operation. In standard operation, buffers are formulated, tested and stored prior to consumption, often in large stainless steel tanks. Buffer formulation requires substantial resource and time, potentially involving off-line testing to ensure each buffer meets the required specification. It follows that buffer management contributes significantly to the overall plant footprint and can incur significant CAPEX and OPEX, with some authors citing buffer management as a prominent bottleneck in the entire production line [29]. As detailed in Table 2, two control techniques are readily available to address the buffer bottleneck, namely in-line dilution (ILD) and in-line conditioning (ILC).

Figure 1a details the ILD configuration which requires the preparation of concentrated buffer solutions, which are precisely diluted in-line using water for injection (WFI) [30]. The diluted buffer is then fed directly into the chromatography column. Most buffer solutions required for chromatography are relatively dilute. Therefore, storing highly concentrated versions and diluting in-line drastically reduces the size and quantity of buffer preparation and storage vessels required [31]. Cost savings are further enhanced if ILD reduces volume requirements to a point where single-use bags can be used instead of tanks. The ILD can be controlled by calculating the flowrate set-points of the concentrated buffer(s) and WFI streams prior to running the process. During ILD, flow indicators on each stream provide feedback to the controller, which manipulates the pumps and flow control valves to ensure the set-points are

met, as shown in Figure 1a. Secondary feedback can be facilitated using final buffer pH and conductivity readings if required [32], whilst accounting for potential probe drift and erroneous calibration. Flowmeters typically provide highly reliable data. However, when relying on flow control only, the pre-formulated buffer concentrates must be prepared with great precision as dilution will propagate any small errors introduced [31]. ILC eradicates this issue and can instigate further CAPEX and OPEX reductions.

ILC considers the controlled formulation of bioprocess buffers from individual component solutions and WFI immediately prior to consumption. The resulting buffer is fed directly into the purification process, thereby eliminating the need for laborious buffer formulation and storage prior to running the process. An example ILC system is provided in Figure 1b. The plant footprint and cost reductions can be greater than that of ILD, as individual buffer components can be stored in higher concentrations than a pre-formulated buffer concentrate [29]. Furthermore, any deviations in concentration, pH or conductivity from specification potentially introduced during dilution are prevented. A chromatography ILC system utilises four inlets namely: acid components, base components, salt solution, and WFI. As with ILD, feedback control is implemented to ensure that the final buffer solutions meet the specifications. If precisely formulated stock solutions of acid, base and salt are available, feedback control using only flowrate measurements and pre-determined flowrate set-points is possible (see Figure 1b). The conductivity and pH of the final buffer are monitored to ensure the product is suitable for real-time use. Dynamic feedback control using conductivity and pH probes is also possible and should be considered in situations where close control of the pH or conductivity is required, such as during linear gradient elution, or where variability in the stock solutions is anticipated.

The benefits of the ILD and ILC buffer control systems are numerous. For example, Kedrion Biopharma showed that implementing ILC reduced their tank requirements by 84%, facilitating the adoption of single-use buffer tanks [33]. Furthermore, the buffer preparation time was reduced by 69%, and the overall plant footprint was reduced by 61%. The benefits of automating buffer formulation by applying feedback control are clear: it reduces CAPEX and plant footprint, simplifies buffer preparation, and improves process robustness by reducing buffer variability. It follows that the implementation of in-line buffer formulation systems will become more commonplace, as control system expenses reduce and regulatory familiarity with the technology improves.

2.2. Fractionation control systems

A critical process control decision is selecting when to collect the product from the eluting stream. A typical product fractionation control system is depicted in control loop A of Figure 2.

The controller relies on in-line data from an ultraviolet (UV) spectrophotometer at the column outlet to inform the control decision. As detailed in Table 2, UV absorption at 280 nm is a well-established method for quantifying the total protein content during the process [34]. The UV 280 nm absorbance is monitored continuously in-line, and the spectroscopy data is fed to the fractionation control unit. The control unit then dictates whether the column outlet stream is collected as product or is directed to waste. A common strategy employed is to instigate product collection when a minimum UV absorbance threshold is surpassed and terminate collection when the UV absorbance falls below a pre-determined value. The absorbance threshold used should be low enough to prevent significant product loss, but should ensure that product collection is not instigated too early due to inherent process disturbances or detector noise [35].

In analytical chromatography applications, defining the collection point is usually trivial; the eluting components are typically well resolved. However, this is not always the case for industrial systems. Productivity requirements mean industrial chromatography systems are often overloaded and therefore, component elution profiles overlap. This challenging purification scenario is demonstrated graphically in Figure 3a, where a product molecule elutes between early and late eluting impurities. Due to the presence of impurities before and after the product peak, it is not possible to start and stop product collection based on a minimum UV 280 nm absorbance threshold. Furthermore, the single wavelength absorbance data provides a surrogate measure of the total protein content and cannot be used to ascertain the relative amounts of different protein species in the eluent. Finally, high column loading also results in a wide range of protein concentrations at the column outlet, leading to saturation of the UV spectrophotometer. Therefore, selecting the optimum product collection times during an industrial scale multicomponent purification is a great challenge, especially when separating complex products from multiple product-related impurities.

To mitigate the risk of low product yield and high impurity content, product can be collected in discrete fractions spanning the width of the product elution peak. The individual fractions can then be analysed off-line, and the appropriate fractions pooled together to obtain a final pool that meets the specifications. However, under GMP regulations, retrospective off-line analysis adds an entire manufacturing shift to the production timeline, and incurs additional consumption of materials and resources [36]. Furthermore, the large volumetric flowrates observed during large-scale chromatography means collecting and analysing multiple eluate fractions is impractical. It follows that there is a substantial need to identify optimal product cut times during the chromatography process. To enable this, deconvolution of the chromatogram is required in real-time, so that the data can be transmitted to the fractionation controller during the process.

To obtain the additional data required to better-inform process control, on-line high-performance liquid chromatography (HPLC) systems positioned at the column outlet can be used (see Table 2). On-line HPLC is now finding regular application in industry, following several publications demonstrating the ability of automated HPLC systems to inform chromatography process control [36–38]. By introducing a fully automated sampling line from the column outlet, and feeding this into an analytical chromatography system, the large-scale chromatogram can be deconvoluted retrospectively. Data regarding separate co-eluting species is then passed to the control algorithm, enabling better-informed cut time selection. HPLC assays are robust and well-established, can handle broad concentration ranges, and can provide accurate concentration data to the controller. Furthermore, multiple columns can be operated in parallel to significantly reduce the delay between sample acquisition and data transmission to the controller.

However, the time associated with sampling and analysis still incurs a significant process delay, and on-line HPLC requires substantial CAPEX relative to UV-based fractionation. The requirement for an auto-sampler and potentially multiple HPLC units also increases system complexity. In addition, high-pressure (> 600 bar) HPLC is often utilised to enable shorter analysis times and provide data to the controller in shorter timeframes. Shorter HPLC elution times may result in peak overlap of similar proteins and so may not be able to give satisfactory resolution for complex separations [37]. Therefore, the addition of on-line HPLC is only recommended when there is a clear business case; the cost savings and process robustness improvements must outweigh the higher CAPEX and increased complexity on the manufacturing floor [36].

Additional process control challenges are introduced when operating a continuous chromatography system. Continuous chromatography makes use of multiple chromatography columns in series to utilise the full loading capacity of each column. It is generally used for ‘bind-and-elute’ chromatography, with column operation consisting of the load, wash, elution, and regeneration steps. Many terms have been used to describe continuous chromatography. These include periodic counter current (PCC), simulated moving bed (SMB), and sequential multicolumn continuous chromatography (SMCC) [39–41]. These different continuous chromatography systems have different levels of complexity and flexibility, complicating the development of control systems for continuous chromatography. While utilising differing terminology, number of columns, and methods to explain and visualise the process, the underlying theory and mechanisms are the same. Multiple columns are used to run loading continuously and elution discretely in a cyclical fashion. An example of a continuous chromatography setup, which makes use of three columns in a continuous six-step cycle, has previously been described by Warikoo et al. [40]. Thus, for the purpose of demonstrating and

commenting on continuous chromatography control schemes in this review, a three-column process is considered (see Figure 4).

Continuous chromatography offers several distinct benefits when compared with traditional batch chromatography. First, the greater utilisation of the resin allows for similar processes to be operated with smaller columns when compared to batch. Second, the reduced column size reduces the amount of buffer needed, thus reducing CAPEX, OPEX, and can yield higher productivity [42–45]. However, industrial application of continuous chromatography is less common due to the increased operational complexity when compared to batch processes. This is evident in Figure 4, where an additional control loop (control loop B) and valve manifolds are required to facilitate column switching. Control loop B functions by utilising in-line UV 280 nm readings at the column flow-through outlet to direct the feed and buffer streams into the appropriate column. When the UV absorbance at the outlet of the second column surpasses a pre-determined breakthrough absorbance, the control unit manipulates valve positions in the inlet and outlet manifolds to move to the next step in the cyclic process outlined by Warikoo et al. [40]. The feed stream is directed to the inlet of column 2, the flow-through stream is redirected to column 3, and the fully-loaded column 1 is prepared for elution. The controller guides the process through the six-step cycle, mitigating product loss even as column binding capacity deteriorates and feed content varies. Traditionally, continuous chromatography is controlled through timed column switching based on pre-determine breakthrough times. However, this has the downside of not accounting for changes in feed or resin. This can result in lower column utilisation, product purity and yield, thereby demonstrating a key benefit associated with improved process control.

The increased complexity of continuous chromatography also introduces further product fractionation challenges in addition to those summarised for batch systems. When applying a timed column switching strategy, subtle variations in elution profiles and resin binding capacity can introduce column-to-column variability in purity and yield [46]. The impact of this variation is demonstrated in Figure 3b. Despite applying a constant product collection time, t_p, and time between column switches, t_{CS}, to each of the columns, the theoretical purity and yield of the product stream obtained from each column is different. In the second column, the product molecule elutes slightly later than expected, resulting in a reduction in purity and yield. In the third column, the quantity of product bound to the column is lower, potentially due to variations in the product concentration in the feed or column binding capacity, resulting in a lower product purity in the product stream. This further demonstrates the potential gains associated with an adaptive fractionation strategy that can respond to inherent process variation.

From the information presented, it is evident that the fractionation control technologies applied to batch and continuous chromatography are limited. In particular, product fractionation controllers are limited by the basic UV spectroscopy and time-consuming HPLC systems used to inform fractionation decisions. Consequently, alternative techniques have been developed to rapidly provide substantial product and impurity concentration data to the controller in real time, or predict the optimum product cut times in advance. More advanced process controllers, PID and model predictive control systems, also rely on real-time data to function effectively.

3. Advanced monitoring and control technologies in research and process development

The most promising technologies for industrial chromatography control are spectroscopy instruments in conjunction with multivariate data analysis (MVDA), mechanistic modelling-based controllers and model predictive control. Therefore, a review of spectroscopy-based control strategies demonstrated in research and process development is given. This is followed by a summary of mechanistic modelling, PID control and model predictive control applied to industrial chromatography control systems.

3.1. Spectroscopy-based control systems

Although the majority of published chromatography research typically focuses on process monitoring, there has been a recent increase in applications that demonstrate process control which are summarised in Table 3. Due to rapid measurement time and relatively high accuracy, recent advanced chromatography control strategies primarily utilise spectroscopy-based PAT for in-line monitoring of the process. While UV 280 nm spectroscopy remains the dominant spectroscopy tool for process monitoring and control, there are now several other spectroscopy PATs available. These include infrared (IR), Raman, multi-angle light scattering (MALS), variable pathlength UV, fluorescence, and combined multi-sensor systems. The spectroscopy data generated by these PATs can be correlated to specific CPPs or CQAs through the development of MVDA or machine learning models and can provide real-time predictions of these variables. These predicted CQA or CPP measurements are often classed as “soft-sensors” and can be integrated within a controller to enhance their monitoring and/or control [47–49] . A review of these spectroscopy PATs implemented within process control strategies is discussed.

PAT often requires the application of multivariate data analysis (MVDA) and machine learning methods to extract useful information from large quantities of multivariate raw data [34]. The need for MVDA techniques is especially prominent for spectroscopy-based PATs, due to the potentially large number of variables (wavelengths) and typically noisy signals captured. The results of MVDA can be used to make predictions of product CQAs, and inform process control

decisions. Two MVDA techniques frequently applied to spectra are principal component analysis (PCA) and partial least squares (PLS) regression [21]. In PAT applications, PCA is well-suited to detecting and enabling removal of erroneous data points in multivariate datasets responsible for an unexpected increase in variance [50,51]. Whilst PCA can also be extended to make predictions of product CQAs via principal component regression [52], PLS is the prevalent regression technique applied to predict attributes from spectroscopy data. Methods for constructing and optimising PCA and PLS models can be found in the comprehensive review by Rolinger at al. [21], and elsewhere in the literature [52–55].

3.1.1. UV/vis spectroscopy

Due to its common usage in industry, UV spectroscopy has seen more focused interest as a PAT in the development of process control strategies for chromatography. The simplest UV spectroscopy control methods utilise a single wavelength. The monitoring method measures the difference between the breakthroughs UV versus the feed, subtracting the baseline absorbance from both. There has been previous implementation of single wavelength UV spectroscopy to continuous chromatography [40,56,57]. In addition to controlling fractioning and loading decisions, the control strategies use the loading information to control column switching. This allows the process to switch columns at the optimal time based on changes to the feed, which timed-column switching cannot accomplish in real-time, as outlined in Figure 3. However, single wavelength controllers have limited accuracy when compared to more complex spectra controllers.

In order to improve the accuracy of the PAT, the UV/vis absorbance of a solution over a spectral range can be measured [58,59]. This is due different amino acids absorbing different amount of light at different wavelengths, giving each protein its own spectral fingerprint. Utilising this spectra fingerprint, it is possible to differentiate and quantify proteins within a multi-protein solution. Multi-wavelength UV/vis spectroscopy monitoring methods has seen the application in the control of fractioning and pooling of batch protein A chromatography [60]. Using a spectral range of 200 to 410 nm, a PLS model was calibrated and validated for the differentiation of protein and impurities. The PLS model was then applied to the real-time monitoring of the varying protein concentrations. By utilising a broad spectral range rather than a single wavelength, the control strategy was able to accurately differentiate product and impurities when compared the traditional single-wavelength counterparts. The final model, which subtracted the impurity background, reached a root mean squared error (RMSE) of 0.01 mg/ml for predictions and, it showed promise for the application to continuous chromatography as well. However, while the use of a PLS model for the monitoring and control of the process shows promise, it does come with drawbacks. First, the PLS model was difficult to accurately calibrate over a wide range of concentrations, making high feed concentration variability of

problem for the control strategy. Second, high feed concentrations may lead to saturation of the detector, preventing the PAT from accurately informing the model. Finally, as the number of impurities present in the feed increases, the accuracy of the model decreases [59].

Finally, mechanistic control models coupled with UV spectroscopy monitoring has seen implementation in a two column continuous chromatography control [61]. The work utilizes a transport dispersive mechanistic model-based approach to design, optimise and control the process. By measuring the concentration of the feed at-line with the use of a UV spectrophotometer, the model predicts when the product peak will elute and make the fractioning decision. In addition, the model accounts for aging resin (by reducing the density of the Protein A ligands parameter in the model) and changing upstream conditions. The implementation of the mechanistic controller successfully accounted for variations in the feed and the two column continuous chromatography set-up lead to a 2.5-fold higher capacity utilisation. The mechanistic model utilized for chromatography control in the paper is further discussed in section 3.2. While the mechanistic model does account for resin aging and varying upstream conditions, it does not capture all variability present in the system. This can lead to the mechanistic control method improperly determining the elution cutting times. A potential solution to this could be the implementation of an MVDA controller at the outlet to identify variations between the predicted and real output. Furthermore, the feed concentrations used where lower than typically seen in industry (0.2-0.8 g/L). For these reasons, further studies at large scale and higher feed concentrations are requirement to optimise this control strategy.

3.1.2. Infrared (IR) spectroscopy

Recently, through the implementation of multi-wavelength near IR spectroscopy (NIR) monitoring, the development of a control strategy for column load in continuous chromatography with Protein A columns has been demonstrated [62]. Initially a NIR flow cell was placed at the inlet of the columns and a spectrum of the feed was collected every 3 seconds. Using a PLS model calibrated with a reference spectrum, the concentration of the mAb of interest could be determined to within ±0.05 mg/ml. The control strategy utilized the information from the PLS model to ensure the feed concentration was between the desired operating range of 3 mg/ml to 8 mg/ml, ensured optimum resin utilisation, and controlled column switching and fractionation. The control strategy was designed to handle extreme deviations in feed concentration outside the desired operating range and adjust times in various steps of the continuous counter-current chromatography as needed. Through the implementation of a secondary NIR flow cell at the outlet, further insight is gained by monitoring changes in column binding capacity in real time. This provides early warning of resin degradation as well as other column issues. This system reduces resin cost while

increasing process predictability and consistency. The accuracy of Multi-wavelength NIR monitoring in real time was shown to be significantly better than multi-wavelength UV-spectroscopy, making it a more promising PAT for chromatography control. However, industrial scale tests are still required to fully verify and optimise the control method.

In addition to its ability to differentiate and quantify proteins and their impurities, IR spectroscopy has demonstrated potential application as a PAT for column fouling monitoring [63]. However, since water is strongly absorbed with the mid-IR light range, the transmission cell path length can be no more than a single layer of resin beads [64]. To overcome the path length limitation, Attenuated total reflection Fourier transform IR (ATR-FTIR) was utilised. ATR only probes a layer a few micrometres deep that is adjacent to the surface of the ATR crystal. With this technique, resin beads are fed into an in-column ATR-FTIR cell. The analysis methods is able to differentiate the beads, proteins, DNA, and lipids present in the column, providing the opportunity to characterise what component are primarily responsible for the column fouling. This provides more information on the state of the column than fluorescence spectroscopy does when it is applied to column fouling determination [65,66]. Though recent studies indicate that fluorescence spectroscopy may be simpler and more accurate to implement for real-time monitoring than ATR-FTIR, it is still a promising PAT due to its ability to differentiate product and impurities. Furthermore, scale-up studies are still required to confirm the findings on industrial scale.

3.1.3. Raman spectroscopy

A spectroscopic technique receiving increasing interest in literature due to its high molecular specificity, robustness and minimal water interference is Raman spectroscopy [67]. Raman and IR spectroscopy are both vibrational spectroscopy techniques that operate in the visible and near infrared region. Although no current literature has been published using Raman spectroscopy as a PAT in process control of chromatography, Raman spectrometry has seen recent interest as a PAT for monitoring chromatographic operations [68,69].

Raman spectroscopy has broad application in biology, chemistry and has been applied in many environmental and industrial applications [70]. This includes the identification of modified nucleosides, a tumour biomarker present in urine, for cancer diagnosis. Following separation using affinity chromatography, the modified nucleosides were supplemented with gold, and surface-enhanced Raman scattering (SERS) spectroscopy was utilised to create a biochemical profile of the markers [71]. Due to its ability to identify proteins as well as their aggregates, it has seen recent application to chromatography application. Raman spectroscopy has been used to quantify aggregation in 3 insulin analogues: lipro, aspart, and glulisine, highlighting its implementation as a PAT for aggregation determination [72].

Furthermore, Raman spectroscopy has been implemented as an on-line sensor to monitor breakthrough curves using an extended Kalman filter approach (EKF) analyser [69]. Enhanced Raman spectroscopy techniques, such as UV resonance Raman spectroscopy (UVRRS), have been developed to increase sensitivity and minimise fluorescent interference [68]. Finally, Raman has seen application both upstream, as an at-line monitoring tool for high-throughput (HT) micro-bioreactor cultivation of mammalian cells, and downstream, to compare different elution conditions for a cation exchange (CEX) chromatography step for an Fc-fusion protein [54].

However, Raman spectroscopy does come with its drawbacks. First, the novel filters and lasers required are expensive and complex, as such its implementation outside of process development environments has been slow. Second, while conventional Raman spectroscopy has been proven at high protein concentrations, it is less robust and sensitive for lower concentrations. While Raman was able to measure protein concentration and monomer purity in CEX chromatography, it could not accurately predict of high and low molecular weight species, which were present in low concentrations [54]. Third, Raman scattering is inherently weak and is susceptible to fluorescent interference. When performing ion exchange chromatography on simulated plasma protein containing albumin and fibrinogen, the poorly soluble fibrinogen fraction caused significant impediment to the accuracy of the Raman spec analysis through [73]. This highlights the potential problems of implementing Raman spectroscopy as a PAT for chromatography control. The instrumentation costs are significantly more than that of the alternatives and problematic fluorescence can limit its application in biological samples. Despite this, it is evident that Raman spectroscopy has the potential to be used as a PAT analyser for chromatography; providing that core instrumentation costs fall, equipment familiarity improves and techniques such as UVRRS mature [67].

3.1.4. Light scattering technologies

Light scattering technologies can be subdivided into two types. The first is static light scattering (SLS), which measures the light scattered at many different angles to determine the average intensity of a sample. This is useful to determine the structural characteristics of the sample. The second, dynamic light scatter (DLS), measures the fluctuations in the scattering intensity over time to characterise the diffusion of particles within a sample [74]. One promising SLS technology for chromatography monitoring is (MALS). Due to MALS ability to rapidly measure molecular weight in real time, it is a powerful tool to control for aggregate levels in product fractions. MALS can be used as a PAT on its own or combined with size-exclusion (SEC) chromatography [75]. In fact, MALS has seen recent implementation as an in-line PAT and on-line when coupled with ultra-high performance SEC chromatography (UHP-SEC-µMALS) for the control of chromatography fractionation [76]. The rapid (<1s) MALS measurements

were able to reduce and control aggregate levels during fractionation, potentially removing the need for post purification analysis of aggregates. However, MALS is limited by two main drawbacks. First, rapid changes in concentration may affect the accuracy of MALS measurements. Second, MALS may be challenging to implement in other unit operations with significant difference in matrices and buffer conductivities [22]. For example, with bind-and-elute chromatography. Despite these hurdles, MALS remains a promising tool for fractionation control for chromatography process providing aggregate clearance.

3.1.5. Variable pathlength UV-vis spectroscopy

Industrial scale chromatography produces complex multicomponent outlet streams, often containing a wide range of protein concentrations. Therefore, protein concentrations observed are often outside the narrow linear range of standard UV/vis spectroscopy equipment. To overcome this challenge, UV/vis equipment has been developed that automatically changes the optical pathlength during process measurements, thereby extending the concentration range over which accurate measurements can be obtained, rendering sample dilution unnecessary [22].

Recently, two variable pathlength UV spectroscopy products have entered the market, namely the SoloVPE® and FlowVPE®. The FlowVPE® is of particular interest for process control, as it can be utilised in-line. The technology measures the UV absorbance of a solution at several pathlengths for each wavelength desired. For a given wavelength, a simple linear regression between the absorbance and the optical pathlength is assumed, and a least squares problem is solved to obtain the gradient and intercept. The gradient obtained is the critical component, as it is used together with the Beer-Lambert law to calculate the protein concentration in the solution [77]. This value can then be used to make better-informed control decisions, utilising only in-line equipment.

Despite the improvements stated, variable pathlength UV equipment maintains a key disadvantage from its fixed pathlength predecessor; the FlowVPE® is incapable of distinguishing between different proteins and their derivatives [22]. To overcome this, Brestrich et al. [77] applied MVDA to exploit the difference in absorbance spectra between different protein variants in a cation exchange chromatography effluent stream. A PLS model was developed, validated and utilised together with the in-line FlowVPE® to dictate product pooling. The variable pathlength UV equipment enabled measurements over a wide concentration range (<80 g/L), whilst the PLS model enabled differentiation between the protein species investigated. However, the system demonstrated was not without its own set of challenges. Differences in UV absorbance spectra between mAbs, high molecular weight and low molecular weight variants are subtle. Exploiting these differences presents a significant

obstacle to overcome via PLS modelling [77]. Additionally, the FlowVPE® still suffers from the inherent light scattering challenges associated with standard UV spectroscopy when quantifying highly concentrated, and therefore highly turbid, protein product streams [22]. Furthermore, despite being an in-line technology, the measurement time was large (~30s) relative to standard spectroscopy equipment. This is due the requirement to adjust the location of the optical fibre for each pathlength measured [77]. It follows that further proof of method robustness, and optimisation of the variable pathlength UV spectroscopy acquisition and analysis times, would be of great interest to the field.

3.1.6. Fluorescence Spectroscopy

While most PAT applied in chromatography are utilized in the control of fractionation and loading time, tryptophan fluorescence spectroscopy has been utilised for monitoring fouling and protein misfolding. The technology takes advantage of the fluorescence signal generated by tryptophan when excited by a 280 nm UV light source which can be measured in the 350 nm range. This phenomenon was first applied to proteins in 1978, when tryptophan accessibility was used to differentiate the monomer and dimer of bovine aspartate aminotransferase, and has since been used to investigate a variety of protein structural changes [78–81]. Due to the utilisation of 280 nm light for excitation, the protein absorbance can be determined concurrently to misfolded proteins levels, thus making it a potential dual PAT in one. The Vernier Fluorescence/UV-VIS Spectrophotometer is an already existing tool that is able to achieve this.

Apart from misfolded protein determination, tryptophan fluorescence spectroscopy has shown promised for implementation as a PAT tool for screening a variety of cleaning in place (CIP) protocols for protein A chromatography. Many PAT have been tested as qualitative or quantitative analytical tools for fouling. These include HPLC, scanning electron microscope (SEM), mass spectrometry (MS), and Fourier transform infrared spectroscopy (FTIR). However, tryptophan fluorescence spectroscopy has been demonstrated to be superior in fouling determination as wells as for screening a variety of cleaning in place (CIP) protocols for protein A chromatography [65]. In addition, the fluorescence-based PAT was applied for on-line monitoring and combined with control strategies to determine when to initiate column cleaning [66]. While not directly improving product purity and yields, the implementation of fluorescence spectroscopy reduces OPEX. The application of fluorescence spectroscopy as a PAT for CIP buffer screening has been show to optimize CIP buffer to maximize foulant clearance while minimizing ligand degradation. This has the added benefit of improving column life span. Column fouling monitoring also serves to increase column life span and buffer utilisation. Rather than arbitrarily performing CIP after a set number of cycle, the control strategy determines when fouling has reached critical levels. This reduces the frequency of

CIP to only when the process requires it, reducing OPEX and increasing column lifespan. The variety of applications for the PAT make it a promising tool for chromatography control. However, fluorescence spectroscopy is limited due to utilising only one wavelength to measure tryptophan fluorescence, limiting the PAT's accuracy and ability to differentiate proteins.

3.1.7. Multi-sensor systems

The majority of spectroscopy-based PAT control systems proposed for industrial chromatography apply a single spectroscopy technique. Each system has associated benefits and shortfalls. To mitigate for these shortfalls, recent publications have explored multi-sensor systems, where data from several sensors is combined and leveraged to develop predictive empirical models [82,83]. The model outputs are then used to inform control decisions.

Sauer et al. [82] considered a cation exchange chromatography system for purification of an Escherichia coli derived growth factor, whereas Walch et al. [83] considered a Protein A step. The control systems proposed in both publications required the development a PLS model for each attribute tested. Sauer et al. [82] proposed three model categories; 1. basic models using standard UV, pH and conductivity signals; 2. medium models incorporating MALS and refractive index (RI) predictors; and 3. extensive models including ATR-FTIR and fluorescence spectroscopy techniques. All three model types were tested for each attribute, and the appropriate model in each case was determined using the root-mean squared error (RMSE). A significant reduction in RMSE would justify the application of a more complex model. For attributes where the extensive and medium models resulted in no significant reduction in RMSE, basic models were proposed.

In both papers, basic models were sufficient for overall quantity predictions, and extensive models were deemed appropriate for host-cell proteins and double-stranded DNA content. Walch et al. [83] required fluorescence, UV and RI signals for monomer content. ATR-FTIR, UV, RI and fluorescence signals best predicted high molecular weight impurity content. The developed models facilitated the application of model-based pooling strategies. Pooling criteria were based on maximum impurity content and minimum product content. The PAT control schemes designed compared well to equivalent at-line pooling schemes using the same pooling criteria.

However, the recent and comprehensive spectroscopy PAT review paper by Rolinger, Rüdt and Hubbuch [21] highlighted several factors that must be considered when deriving MVDA models from multiple sensor inputs. The main considerations highlighted are as follows. Firstly, when predicting DNA and HCP content, the output variables are typically ratios not linearly correlated to spectra and span several orders of magnitude. Therefore, nonlinear empirical modelling alternatives may be more suitable than linear modelling such as PLS.

Alternatively, nonlinear relationships could be accounted for during model building by including bivariate interaction and polynomial terms. Secondly, if multiple variables and several nonlinear terms are included in model building, it is critical that the empirical model does not succumb to overfitting or derive fictitious correlations. Thus, it is key that cross-validation functions are applied and that the number of samples is sufficiently large relative to the number of input variables. Finally, system complexity increases significantly when using multiple devices potentially with different sampling rates, analysis times and locations on a given process stream. It follows that data pre-processing and alignment is key to ensure subsequent analysis derives the correct outputs [21].

3.2. Mechanistic modelling for chromatography control

Mechanistic chromatography models are formulated from mathematical equations describing the mass transfer and adsorption phenomena observed during a chromatography separation [84]. Also referred to as first-principle models, they can provide more accurate and wider-ranging predictions than empirical modelling alternatives [85], and their value for industrial bioprocess design and optimisation is forecast to increase [86]. Mechanistic modelling of chromatography processes for process optimisation and robustness studies is a prevalent area of research [87,88]. However, with first-principle modelling accuracy and the efficiency of mathematical solvers improving, mechanistic models are finding a growing number of applications for chromatography process control for biopharmaceutical products [89].

For well-predicted systems, Kumar and Rathore [90] demonstrated that mechanistic model simulations conducted prior to running the separation can be used to dictate fractionation. This feedforward control strategy was dependent on the availability of feed composition data, which in this case was obtained using UPLC. In an industrial setting however, feed data may be readily accessible from the upstream operation. A more computationally efficient fractionation method using mechanistic model simulations of the product profile only and an in-line UV signal was also demonstrated [90]. The difference between the overall UV signal and the mechanistic model prediction of the product profile was used as a measure of the impurity content. This overcomes a well-known challenge associated with mechanistic modelling; adsorption modelling of heterogeneous impurity groups is a complex task [19]. The main issue identified with this method was the limited linear range of the UV signal. To accurately identify optimum start and end cut times using the UV signal and the predicted product profile, the chromatogram must be within the linear range of the UV detector.

Steinebach et al. [61] proposed also using the results of previously conducted mechanistic model simulations to inform continuous chromatography control actions, in the form of a look-up table. The constructed table could then be used to select a feed volume per cycle that

guarantees the required product yield for a given feed concentration and flowrate, whilst minimising buffer consumption and maximising capacity utilisation. However, identifying this optimum feed volume per cycle requires measurement of the feed concentration in real-time. As discussed in section 3.1, this can be challenging for concentrated multicomponent feed streams.

Westerberg et al. [91] demonstrated several theoretical mechanistic model-based cut strategies derived from an extensive sensitivity analysis. For an open-loop control system, a worst case UV absorbance value was calculated using an ideal fractionation strategy. This value was used as the absorbance threshold to trigger product collection for 200 subsequent mechanistic model simulations with process disturbances. Feed-forward control methods were also established by fitting linear functions to predict product cut time UV absorbance from several parameters. For example, a piecewise linear function was used to predict cut point absorbance from the load buffer conductivity. A relationship between the cut time UV absorbance and load buffer conductivity was observed during the preliminary sensitivity analysis.

In a more recent in-silico study, Borg et al. [35] demonstrated that, when the product molecule elutes before the impurities, identification of the first cut point is trivial and can be made based on the UV 280 nm absorbance threshold. However, identifying the second cut point required extensive in-silico investigation of the impact on product yield and purity. Robust product fractionation was obtained by selecting the cut point that gives a 99.5% probability of obtaining the target purity. To confirm the strategy, Borg et al. [35] conducted a further 100,000 mechanistic model simulations with process disturbances, of which 99.6% obtained the target purity. Sreedhar et al. [92] applied and contrasted three different algorithms to identify optimal cut-times using empirical and mechanistic modelling, where the product of interest eluted as an intermediate. The mechanistic model was used to simulate an overloaded asymmetrical chromatogram on which to test the algorithms, whereas the empirical model was limited to generating simple symmetrical chromatograms. This demonstrates the enhanced ability of mechanistic modelling to capture the complexity of industrial scale chromatography relative to statistical alternatives.

Mechanistic model-informed process control has also been applied to chromatography processes integrated into a small-scale continuous end-to-end mAb production process [93]. Mechanistic models were developed for each chromatography step in the purification train, and were used to build a comprehensive model of the entire downstream process. Following this, mechanistic model simulations were conducted during the real process to inform control decisions critical to the immediate chromatography cycle. For the product capture step, a

loading factor control strategy was implemented to maximise resin utilisation and mitigate product loss despite variable flow and concentration outputs from the bioreactor. Upstream production rates and concentrations were used in conjunction with the mechanistic model-derived DBC (at 1% breakthrough) to determine the load volume for a given cycle. The controller enabled consistent and higher product concentrations in the capture step product stream, and meant fewer cycles were required per process run thereby increasing column longevity. A feedforward control strategy was implemented to control fractionation in the subsequent ion-exchange steps. The mechanistic models were used to generate chromatograms during the process, utilising product loading data obtained from the complete downstream process model. Using the predicted peaks, theoretical UV absorbance cut-points were calculated that ensured sufficient impurity removal, and were subsequently applied to the real process. Therefore, the process was able to respond to variations in mAb concentrations and feed flowrates, and maintain the output within specifications. Both control schemes were proven over an extended period of 15 days. However, the continuous mAb production process was small-scale (0.8 mg ml^{-1} day^{-1} production rate using a 200 ml perfusion bioreactor), and demonstration of the control strategies at larger-scale is required. When purifying high-titre feed streams, reliance on a UV absorbance-based fractionation strategy may be infeasible due to the wide-ranging protein concentrations.

The benefits of using mechanistic models for control scheme design and testing is evident from the examples given. By working in silico, a multitude of operating conditions and fractionation strategies can be trialled rapidly with minimal expenses and negligible material consumption prior to running the real process [35,61,91,92]. Alternatively, by utilising the mechanistic model in real-time in a feedforward configuration, the need for real-time feedback to the controller is eliminated thereby facilitating real-time control decisions. However, mechanistic model-based strategies are not without their drawbacks. Firstly, such control schemes are reliant on having a readily available and validated mechanistic model of the large-scale process. Whilst this is not typically the case in industry today, recent publications highlight the need to encourage industry uptake of mechanistic models and provide potential solutions to the uptake issue. Potential solutions include providing freely available open-source mechanistic modelling software [94], standardising the model development process [95], and introducing a methodology for quantifying the predictive ability of a mechanistic model [96]. Secondly, feedforward controllers are heavily reliant on the accuracy of the process model utilised, and are unable to respond to unpredicted process deviations. Therefore, feedback control loops utilising well-established control techniques able to respond to such deviations, such as PID and MPC controllers, may provide more robust control alternatives.

3.3. PID controllers for product fractionation

Proportional-integral-derivative (PID) control is a well-established and simple feedback control technique applied routinely throughout industry. The controller output is calculated in response to the error from a given process set-point, using three modes of control; proportional (P), integral (I) and derivative (D). Theoretically, the modes can be applied individually or collectively. However, PI controllers are the most commonly used, followed by simple P and full PID controllers [97]. Once the PID control parameters are tuned (using techniques such as the Ziegler-Nichols method) a PID control algorithm can mitigate deviations from set-points with negligible overshoot and lag. Furthermore, the controller can also be used to facilitate a controlled change in process set-point.

Within bioprocesses, a PID controller is typically applied to regulate easily monitored variables such as temperature, flowrates and pH. Furthermore, the output from more advanced controllers, such as MPCs, may adjust the set-point of several simple PID control loops, thereby relying on the PID controller to implement the required changes. Within biochromatography, PID controllers have been used to control product purity and identify optimum cut-times [98,99].

In the first example, a PID controller was designed and applied to two purification processes, using standard UV 280 nm signals to provide feedback data to the control system [99]. The objective of the controller was to ensure the product peak was positioned at a predetermined optimum location within the product elution window. PID control relies on a single input. Therefore, the UV signals obtained were converted to a single value via two alternative techniques, which were later compared. The simple peak maximum method determined the time at which the UV peak maximum occurred, and fed this value to the PID controller. The second approach accounted for the non-Gaussian shape of an overloaded industrial chromatogram. The chromatogram was integrated, and the first moment of the chromatogram area in the x-axis (time) was computed and fed to the control scheme. The PID controller then adjusted the cut-time to minimise the error between the time value calculated and the set-point time. The results showed that the PID controller was able to move the collection window to the desired point and handle process disturbances, using only a UV 280 nm signal. However, the basic nature of the UV signal meant it was not possible to track product yield and purities during the process.

In the second publication, an at-line HPLC system was used to provide information to a PID controller for a two column mAb purification [98]. The product molecule eluted as an intermediate. Therefore, two PID controllers were employed; one to control the early eluting impurity content and another to control the late eluting impurity content. Both PID controllers

were tuned in silico prior to experimentation, using a mechanistic model derived in a previous publication [100]. The PID controllers were then employed as follows. Firstly, the product outlet stream was analysed via HPLC during the cycle. Thus, a deconvoluted chromatogram was available prior to the next cycle. The resulting chromatogram was then integrated using the trapezium rule. The difference between the calculated impurities content and a pre-determined set-point was fed to the PID controllers as an error. The two PID controllers then calculated the start and end salt concentrations for the product elution window. Finally, the required control action was computed via mass balance using the output salt concentrations. The controller was proven in two lab applications, firstly using a synthetic three-protein feed, and secondly with a clarified cell culture supernatant. In both cases, the PID controllers reduced the error to negligible levels within 5 cycles and were able to handle disturbances in flowrate and feed concentration. The controllers also automated the complex task of setting the recycle rate during start-up. However, the target impurity content (5%) was less-challenging than a typical industrial system, and the significant delay associated with at-line HPLC meant real-time control decisions were not feasible. Furthermore, at-line sampling required operator intervention and removal of product from the process, highlighting the requirement for advanced PATs to rapidly provide composite data to the control scheme.

Both the UV and HPLC-based systems tested demonstrate that closed-loop PID controllers can be used to determine product cut-times during the process, thereby ensuring consistent attainment of the product quality attributes despite uncontrolled disturbance and variable feed compositions. However, for PID controllers to provide real-time control actions, detailed information regarding outlet compositions is required rapidly. As discussed previously, this is a great challenge for biomolecules. Furthermore, PID controllers require testing and tuning prior to application. This is relatively trivial and can be conducted in silico if an accurate mechanistic model of the process is readily available. Alternatively, if the purification process is similar to that demonstrated by Krättli et al. [98,99], the PID parameters provided may be suitable as a starting point. If no such model is available, substantial quantities of materials and time may be required to tune the controller. Finally, PID control schemes are relatively basic. Whilst this may enable cheap and simple implementation, more advanced control schemes (such as model predictive control) may be able to provide more accurate feedback and critically, they can facilitate process optimisation during production.

3.4. Model predictive control

Model predictive control (MPC) is a powerful control strategy developed to control multivariate non-linear systems where simple alternatives, such as PID controllers, are insufficient [101]. The benefits of MPC over alternative control methods are numerous [102]. MPC schemes are able to deal with a large number of manipulated and controlled variables, incorporate multiple

variable constraints and time delays into control scheme design, and manage inherent process variability by accounting for process disturbances. By incorporating model predictions, MPC can also forecast, and mitigate for, potential issues [101]. However, this means that the ability of MPC to control a process successfully depends strongly on the accuracy of the process model used. Despite this, MPC is a well-established and proven technique, with applications in the oil and gas industry dating back to the 1980s [102]. Note also that MPC can be used in conjunction with standard PID controllers, where the MPC controller updates PID set-points.

Seborg et al. [101] provide a comprehensive overview of MPC. A summary of the main steps outlined is as follows. Firstly, a process model is used to make current and future predictions of key output variables over a short timeframe. MPC uses a dynamic process model to make predictions, usually a linear empirical model or a linearised version of a complex non-linear model. Secondly, the predictions are used to compute optimal process set-points over the timeframe using a steady-state version of the dynamic model. This steady-state optimisation generally uses a basic objective function, such as maximising production rate or minimising a cost function. Thirdly, the calculated set-points are fed into subsequent control calculations to determine a sequence of optimal control actions using the dynamic process model. The control actions calculated aim to drive the predicted outputs to the calculated set-points in an optimised manner, by satisfying a second specified objective function. Both the steady-state and dynamic optimisations can incorporate variable constraints, such as upper and lower boundaries for input and output variables. Despite a sequence of control actions being calculated, only the first action is enforced. After applying the immediate control action, the timeframe is shifted along a given time step, and the optimisations are repeated. The window of time over which the predictions are made and the control variables are optimised is referred to as the prediction horizon.

It is evident from the MPC procedure detailed above that a critical component of a successful MPC application are the optimisation steps. As optimisation is conducted twice at every time step, MPC can be computationally expensive. Therefore, to ensure the optimisation procedure can be completed rapidly, linear process models are typically employed to facilitate the use of linear optimisation algorithms [51]. As detailed in section 3.2, chromatography systems can be predicted accurately by complex non-linear mechanistic models. Optimisation using non-linear mechanistic models is time consuming, and would result in sub-optimal frequency of control actions. Therefore, in MPC development for chromatography systems, the mechanistic process model is linearised via regression-based techniques such as system identification [103]. This facilitates the use of linear optimisation algorithms, which greatly reduces the computational burden relative to the non-linear alternatives. It should be noted however, that

as computing power increases and non-linear optimisation strategies improve, there is potential to use MPC for near real-time non-linear control [51].

Examples of MPC for chromatography processes in academia date back to the turn of the century, with the focus mainly on continuous systems and chemical products [104,105]. Grossmann et al. [106] provided an in silico example of MPC to a continuous mAb purification process. The mechanistic model, composed of lumped kinetic transport and competitive Langmuir adsorption models, was linearised around a steady-state value. The reduced order model decreased the number of states from 1200 to 22, facilitating the application of a Kalman filter and computationally efficient optimisation. Optimisation and control actions were performed at the beginning of each cycle.

Further research has culminated in the development of the Parametric Optimisation and Control (PAROC) framework by teams at Texas A&M University and Imperial College London [107]. The PAROC framework aims to provide a standardised platform for modelling-orientated process design, optimisation and control, with a focus on deriving mutliparametric MPC systems. When applied to chromatography systems, the proposed scheme consists of four main steps. Firstly, a mechanistic chromatography model is developed and validated. Secondly, the model is linearised via system identification or alternative model reduction techniques. Thirdly, a multiparametric MPC system is formulated using the linearised process model. MPC design and tuning parameters, such as the length of the prediction horizon and the sampling period, are specified. Furthermore, a map of objective function solutions, and so optimal control actions, is produced accounting for input, output and disturbance constraints. Finally, the closed-loop control system is validated in-silico on the original mechanistic model.

The PAROC framework has been demonstrated on continuous systems in several subsequent publications in silico [103,108–111]. In each case, multiparametric MPC is employed to obtain cyclic steady state by monitoring the integral of product and impurity concentrations (the output variables), and using “steady state shift” to carefully control the elution phase. As expected for bind/elute chromatography, the elution buffer salt concentration is identified as the significant input variable, with feed composition incorporated as an uncontrolled disturbance. Whilst feed flowrate is identified to have no significant impact on the eluted quantities, and so is excluded from the input variable set, it does impact the elution time [110]. Therefore, the control strategy was tested over a range of feed flowrates.

The MPC controllers demonstrated have several unique benefits. Consistent operation is obtained, whether that be through the implementation of cycle-to-cycle control actions [106] or through continuous monitoring and control action implementation [109]. The continuous chromatography process can be driven to cyclic steady state, whilst accounting for

disturbances in feed composition. Furthermore, the model-based controller is able to outperform non-model orientated alternatives, such as PID control (see section 3.3), owing to the enhanced understanding imbedded in the linearised process model [109]. However, several publications highlight a focal issue with model-based control for protein purification. The controllers are highly reliant on real-time measurements of protein concentrations in the feed and/or column outlet [106,108]. As described in section 2.2, there are significant drawbacks with established UV spectroscopy and HPLC-based monitoring systems. Therefore, the development of novel PATs to provide feedback to the control scheme is critical. A PAT that can accurately and rapidly monitor co-eluting components may expedite the transition from MPC as an in silico control technique, to a proven control strategy for protein purification at industrial scale.

4. The future of industrial chromatography control systems

Based on the previous discussion, there is a need for advanced chromatography control strategies. The application of these state-of-the-art PATs and control strategies to future industrial chromatography processes must be done on a case by case basis. First, the implementation of PAT such as Raman or NIR for process monitoring comes with additional costs. Second, the implementation of new PATs and the development of control strategies requires experts trained in the use of the PATs and in the development of statistical and/or mechanistic models for control. Finally, there must be enough confidence in the statistical and/or mechanistic models of these tools for industry and regulators to approve them over proven off-line quantification methods.

A schematic of a potential advanced chromatography control strategy is shown in Figure 5. The design uses several PATs to monitor key process parameters as well as information from upstream PAT. Although the figure shows a continuous chromatography set up, the design is also applicable to a batch system. While batch remains commonplace, continuous offers the potential for better process productivity and efficiency as discussed in section 2.2. Furthermore, continuous chromatography works efficiently with perfusion bioreactors, which operate for longer periods of times than batch bioreactors, constantly producing product with lower product composition variations than batch. In a batch chromatography system, the design would remain the same save for removal of the column switching loop.

Figure 5 includes a single control unit which can be mechanistic, statistical, or a hybrid of these two, the nature of the model being dependent on the process in question. This control unit utilises a process model that can be mechanistic, statistical, or a hybrid of these two, the nature of the model being dependent on the process in question. The main control unit makes decisions for each control sub-loop based on the data generated from the PAT in all the sub-

loops. In this way, the response of each control subsystem is dependent on the state of the entire process. To streamline the discussion of Figure 5, the figure discussion is broken down by the individual control loops presented and their importance to the control of the overall process. These control loops are the column switching, production fractionation, column fouling, and external IC loops.

Column Switching Control Loop: As demonstrated in the red control loop, efficient and timely column switching in continuous chromatography improves process efficiency and reduces column to column variation. Traditionally, column switching in continuous chromatography systems is performed by timed switches determined through previous experimental analysis. Due to the limitations of timed column switching discussed in section 2.2, column switching based on column breakthrough determined by utilising spectroscopy-based PAT offers a beneficial alternative, as demonstrated in literature (Table 3). The implementation of a column switching control loop meets regulator desires for more consistent processes and can be easily be achieved with existing product fractionation PAT (Figure 5).

Fractionation Control Loop: Highlighted in blue within the figure, fractionation control is the key to obtaining the desired product yield and purity. While traditional single-wavelength UV methods have often failed to differentiate product and product related impurities for complex separations, recent studies have overcome these challenges through advanced spectroscopy techniques and models, yielding more robust separations (Table 3). The proposed fractionation control loop makes use of a PAT at the inlet and outlet of the column system (Figure 5). The inlet PAT will be utilised to monitor the composition of the incoming feed. This information is fed to the overall empirical/mechanistic model which predicts the elution time of the product and dictates fractionation. The PAT at the outlet monitors the composition of the outlet stream, which is once again fed to the process model. As such, the PAT at the outlet composition determined by the PAT differs significantly from that predicted by the model, the outlet data can be used dictate fractionation. In this way, the ability of the feedforward model-based controller to direct fractionation with a negligible time-delay is exploited, while the validity of model predictions is monitored via feedback data from the PAT.

The PAT providing data to the fractionation loop will likely be spectroscopy based. However, spectroscopy techniques work well in tandem with at-line or automated on-line HPLC/UPLC. Due to its faster measurement time but lower accuracy, the spectroscopy PAT provides the primary source of feedback data to the controller. The HPLC/UPLC measurements, which take longer to produce but are more reliable, are then used to adjust the control decisions made from the spectroscopy measurements or mechanistic model. Combined control strategies utilising both off-line and on-line measurement control strategies have previously

been implemented in the biopharmaceutical industry, such as on fermentation control [112]. For this reason, a controller utilising process data from an in-line spectroscopy PAT and an at-line or automated on-line HPLC/UPLC should be feasible. For systems with significant levels of protein aggregation, the implementation of MALS in-line or by autosampler would be beneficial in reducing and controlling the aggregate levels during the separation [75,76]. Furthermore, the addition of an autosampler adds the additional benefits of previously at-line analysis, such as ELISA, MS, and/or any other complex analysis techniques [22,24]. Though the inlet and outlet PAT provide the critical data to the controller unit necessary for fractionation control, PAT are also utilised to monitor the fouling of the column.

Fouling Control Loop: Shown in green within Figure 5, the fouling control loop monitors column fouling and initiates CIP when needed. The build-up of column fouling over the course of process operation leads to lower binding capacity and therefore decreased operational efficiency. Although this is the case, most current methodologies call for CIP between a set number of column operations recommended by the manufacturer or experimentally pre-determined [113]. This may lead to CIP occurring too early or too late, leading to decreased operational efficiency or faster column degradation. Due to the substantial cost of the chromatography resin, especially protein A resin, there is a desire to maximise column lifespan. Therefore, the implementation of a fouling control loop can be used to reduce process expenses by increasing column lifespan (Figure 5). Fouling of the column can be monitored using fluorescence spectroscopy or ATR-FTIR (Table 3). If a mechanistic model is utilised to control the system, the binding capacity coefficient within the model can be adjusted based on the fouling data obtained from the PAT. Furthermore, the PAT used to monitor fouling can also be used to test the efficacy of CIP buffers, making it a versatile tool to have. The chosen PAT will monitor the column and send data to the control unit**.** When the fouling reaches critical levels, the controller directs the system to implement CIP. The automation of CIP helps maximises the columns lifespan and reduce labour requirements during operation.

Buffer Formulation Control Loop: Finally, highlighted within Figure 5 in purple as an external data link, the buffer formulation control loop automates buffer formulation, allowing for rapid adjustments to adapt to variations in the process. As discussed in section 2.1, automated buffer formulation using feedback control can provide a multitude of potential benefits to a biologic production facility. Benefits include a large reduction in plant footprint and CAPEX thanks to the associated reduction in buffer storage requirements, more consistent and robust buffer formulation, and a substantial reduction in labour and time requirements for buffer production [33]. Therefore, an in-line conditioning (ILC) unit has been included in Figure 5. Close control of the buffer conditions as it is produced within the ILC unit would ensure the equilibration, washing and elution stages proceed as desired. Data regarding buffer pH,

conductivity and salt content can also be passed to the overall process control unit, potentially informing the mechanistic or empirical model simulations used to dictate product fractionation. The process robustness and productivity improvements associated with in-line buffer formulation techniques are expected to outweigh the increased control system costs and complexity [29]. As regulatory and industry familiarity with automated buffer formulation improves, it is expected that such systems will find more regular application for industrial scale protein production as companies strive to eliminate the buffer bottleneck.

It should be noted that advanced chromatography control strategies should only be employed when the cost savings for the process outweigh the increased control complexity and development expenses [36]. When this is not the case, simpler or more traditional control strategies should be implemented. In a simple separation, where the product-related impurities are limited and/or the resolution between the product and impurities is good, a simple control system can be utilised. In such a case, model predictability of the system is likely to be good. As a result, a well-developed and validated mechanistic model may be all that is required to control the process. If a spectroscopy PAT is utilised for monitoring or control, only one or two UV wavelengths may need to be monitored rather than a spectra due to the high resolution between product and impurities.

For more complex separations, with significant amounts of product-related impurities and low resolutions between product and impurities, a more complex controller, such as a hybrid control strategy utilising a mechanistic model coupled with a MVDA based PAT model, will be required. In a hybrid control system, the mechanistic model makes elution time and process predictions based on the composition of the feed stream, column fouling, and other process parameters. The addition of a multi-wavelength spectroscopy system, utilising a MVDA model, is useful for two reasons. First, low concentration impurities are challenging to quantify in-line, and to predict accurately with mechanistic or empirical models. In such cases, the control system may benefit from both models working in tandem. The spectroscopy-MVDA model measures the total protein concentration while the mechanistic model predicts the product concentration. By subtracting the predicted product concentration from the total measured concentration, the protein impurity concentration can be predicted. This is then used to calculate product purity and to fractionate accordingly. Second, the MVDA model monitors for any deviations between the mechanistic model prediction and actual process operation. If significant deviations are found, then the MVDA side of the model can step in to correct the process, and maintain product consistency and operational robustness. Furthermore, this could trigger a mechanistic model recalibration, using an inverse-fit method and the deconvoluted signal from the spectroscopy system to update the model parameters.

5. Conclusion

This paper reviews the growing body of research related to industrial chromatography control for biotherapeutics revealing significant promise that chromatography control will attain the same degree of robustness and rapid response as seen in control systems in traditional process industries. While the implementation of PAT and process control methods do require additional time and cost to develop, they have the potential to fulfil the additional control requirements. Future work will include an in-depth cost analysis to help determine the balance between the upfront costs for developing and implementing advanced control strategies, and the expected savings during process development and product manufacture as a result of enhanced process robustness and productivity. Several advanced industrial chromatography control strategies outlined in this review have demonstrated increased robustness and improved control of product quality attributes, with the potential to become an integral part of biopharmaceutical process development and commercial manufacturing in the future.

6. Acknowledgements

We would like to thank the UCL Decisional Tools research group, the UCL Recovery of Biological Products research group, and CODOBIO for their feedback on our work. Specifically, we would like to thank Beatrice Melinek for sharing useful information and documents with us, and Catarina Neves for her comments regarding cost analysis.

Funding

This research is associated with the joint UCL-AstraZeneca Centre of Excellence for predictive multivariate decision support tools in the bioprocessing sector and financial support for A.A. and K.H is gratefully acknowledged. Furthermore, support from BBSRC for K.H. and CODOBIO for A.A. is also greatly appreciated. This project has received funding from the European Union's Horizon 2020 research and innovation programme under the Marie Skłodowska-Curie grant agreement No 812909 CODOBIO, within the Marie Skłodowska-Curie European Training Networks framework.

CRediT authorship contribution statement

Alexander Armstrong: Conceptualization, Investigation, Writing - original draft, Writing - review & editing. **Kieran Horry:** Conceptualization, Investigation, Writing - original draft, Writing - review & editing. **Tingting Cui:** Supervision, Writing - review & editing. **Martyn Hulley:** Supervision, Writing - review & editing. **Richard Turner:** Supervision. **Suzanne S. Farid:** Supervision, Writing - review & editing. **Stephen Goldrick:** Supervision, Writing - review & editing. **Daniel G. Bracewell:** Project administration, Supervision, Writing - review & editing.

7. References

[1] Z.E. Sauna, H.A.D. Lagassé, A. Alexaki, V.L. Simhadri, N.H. Katagiri, W. Jankowski, C. Kimchi-Sarfaty, Recent advances in (therapeutic protein) drug development, F1000Research. 6 (2017). https://doi.org/10.12688/f1000research.9970.1.

[2] G. Walsh, Biopharmaceutical benchmarks 2018, Nat. Biotechnol. 36 (2018) 1136–1145. https://doi.org/10.1038/nbt.4305.

[3] M. Kessel, The problems with today's pharmaceutical business—an outsider's view, Nat. Publ. Gr. 29 (2011) 27–33. https://doi.org/10.1038/nbt0111-27.

[4] J.W. Scannell, A. Blanckley, H. Boldon, B. Warrington, Diagnosing the decline in pharmaceutical R&D efficiency, Nat. Rev. Drug Discov. 11 (2012) 191–200. https://doi.org/10.1038/nrd3681.

[5] O.J. Wouters, M. McKee, J. Luyten, Estimated Research and Development Investment Needed to Bring a New Medicine to Market, 2009-2018, JAMA - J. Am. Med. Assoc. 323 (2020) 844–853. https://doi.org/10.1001/jama.2020.1166.

[6] A.L. Grilo, A. Mantalaris, The Increasingly Human and Profitable Monoclonal Antibody Market, Trends Biotechnol. 37 (2019) 9–16. https://doi.org/10.1016/j.tibtech.2018.05.014.

[7] P. Gagnon, Technology trends in antibody purification, J. Chromatogr. A. 1221 (2012) 57–70. https://doi.org/10.1016/j.chroma.2011.10.034.

[8] M. Bisschops, M. Brower, The impact of continuous multicolumn chromatography on biomanufacturing efficiency, Pharm. Bioprocess. 1 (2013) 361–372. https://doi.org/10.4155/pbp.13.46.

[9] C. Tsouris, J. V. Porcelli, Process Intensification - Has Its Time Finally Come?, Chem. Eng. Prog. 99 (2003) 50–55.

[10] C. Chen, H.E. Wong, C.T. Goudar, Upstream process intensification and continuous manufacturing, Curr. Opin. Chem. Eng. 22 (2018) 191–198. https://doi.org/10.1016/j.coche.2018.10.006.

[11] J. Strube, R. Ditz, M. Kornecki, M. Huter, A. Schmidt, H. Thiess, S. Zobel-Roos, Process intensification in biologics manufacturing, Chem. Eng. Process. - Process Intensif. 133 (2018) 278–293. https://doi.org/10.1016/j.cep.2018.09.022.

[12] R. Peña, Z.K. Nagy, Process Intensification through Continuous Spherical Crystallization Using a Two-Stage Mixed Suspension Mixed Product Removal

(MSMPR) System, Cryst. Growth Des. 15 (2015) 4225–4236. https://doi.org/10.1021/acs.cgd.5b00479.

[13] D. Yilmaz, H. Mehdizadeh, D. Navarro, A. Shehzad, M. O'Connor, P. McCormick, Application of Raman spectroscopy in monoclonal antibody producing continuous systems for downstream process intensification, Biotechnol. Prog. 36 (2020). https://doi.org/10.1002/btpr.2947.

[14] J.M. Juran, Juran on quality by design: the new steps for planning quality into goods and services, Simon and Schuster, 1992.

[15] FDA, ICH Q8(R2) Pharmaceutical Development, Work. Qual. by Des. Pharm. 8 (2009) 28.

[16] L.X. Yu, G. Amidon, M.A. Khan, S.W. Hoag, J. Polli, G.K. Raju, J. Woodcock, Understanding pharmaceutical quality by design, AAPS J. 16 (2014) 771–783. https://doi.org/10.1208/s12248-014-9598-3.

[17] C. Finkler, L. Krummen, Introduction to the application of QbD principles for the development of monoclonal antibodies, Biologicals. (2016). https://doi.org/10.1016/j.biologicals.2016.07.004.

[18] CMC Biotech Working Group, A-Mab: a Case Study in Bioprocess Development (Version 2.1), (2009).

[19] D. Baur, J. Angelo, S. Chollangi, T. Müller-Späth, X. Xu, S. Ghose, Z.J. Li, M. Morbidelli, Model-assisted process characterization and validation for a continuous two-column protein A capture process, Biotechnol. Bioeng. 116 (2019) 87–98. https://doi.org/10.1002/bit.26849.

[20] FDA, Pharmaceutical CGMPs for the 21s Century - A risk-based approach, Food Drug Adm. (2004) 32. http://www.fda.gov/Drugs/DevelopmentApprovalProcess/Manufacturing/QuestionsandAnswersonCurrentGoodManufacturingPracticescGMPforDrugs/UCM071836.

[21] L. Rolinger, M. Rüdt, J. Hubbuch, A critical review of recent trends, and a future perspective of optical spectroscopy as PAT in biopharmaceutical downstream processing, Anal. Bioanal. Chem. 412 (2020) 2047–2064. https://doi.org/10.1007/s00216-020-02407-z.

[22] D.P. Wasalathanthri, M.S. Rehmann, Y. Song, Y. Gu, L. Mi, C. Shao, L. Chemmalil, J. Lee, S. Ghose, M.C. Borys, J. Ding, Z.J. Li, Technology Outlook for Real Time Quality

Attribute and Process Parameter Monitoring in Biopharmaceutical Development – A Review, Biotechnol. Bioeng. (2020) bit.27461. https://doi.org/10.1002/bit.27461.

[23] F. Feidl, S. Vogg, M. Wolf, M. Podobnik, C. Ruggeri, N. Ulmer, R. Wälchli, J. Souquet, H. Broly, A. Butté, M. Morbidelli, Process-wide control and automation of an integrated continuous manufacturing platform for antibodies, Biotechnol. Bioeng. 117 (2020) 1367–1380. https://doi.org/10.1002/bit.27296.

[24] M.K. Maruthamuthu, S.R. Rudge, A.M. Ardekani, M.R. Ladisch, M.S. Verma, Process Analytical Technologies and Data Analytics for the Manufacture of Monoclonal Antibodies, Trends Biotechnol. (2020). https://doi.org/10.1016/j.tibtech.2020.07.004.

[25] M. Jiang, K.A. Severson, J.C. Love, H. Madden, P. Swann, L. Zang, R.D. Braatz, Opportunities and challenges of real-time release testing in biopharmaceutical manufacturing, Biotechnol. Bioeng. 114 (2017) 2445–2456. https://doi.org/10.1002/bit.26383.

[26] EMA, Guideline on Real Time Release Testing (formerly Guideline on Parametric Release). European Medicines Agency, Committee for Medicinal Products for Human Use, 2012.

[27] ICH, Guidance for Industry Q8(R2) Pharmaceutical Development, 2009.

[28] FDA, Guidance for Industry PAT - A Framework for Innovative Pharmaceutical Development, manufacturing, and Quality Assurance, 2004.

[29] E.N. Carredano, R. Nordberg, S. Westin, K. Busson, T.M. Karlsson, T.S. Blank, H. Sandegren, G. Jagschies, Simplification of Buffer Formulation and Improvement of Buffer Control with In-Line Conditioning (IC), in: Biopharm. Process. Dev. Des. Implement. Manuf. Process., 2018. https://doi.org/10.1016/B978-0-08-100623-8.00027-X.

[30] H. Schmidt-Traub, M. Schulte, A. Seidel-Morgenstern, Preparative Chromatography: Second Edition, Wiley-VCH, Weinheim, Germany, 2013. https://doi.org/10.1002/9783527649280.

[31] T. Matthews, B. Bean, P. Mulherkar, B. Wolk, An Integrated Approach to Buffer Dilution and Storage, Pharma Manuf. (2009).

[32] M. Li, V. Kamat, H. Yabe, T. Miyabayashi, S. Jariwala, Process Analytical Technology-Based In-Line Buffer Dilution: In Downstream Bioprocessing, Pharm. Technol. (2010).

[33] D. Fabbrini, C. Simonini, J. Lundkvist, E. Carredano, D. Otero, Addressing the

Challenge of Complex Buffer Management: An In-Line Conditioning Collaboration, Bioprocess Int. (2017).

[34] M. Rüdt, T. Briskot, J. Hubbuch, Advances in downstream processing of biologics – Spectroscopy: An emerging process analytical technology, J. Chromatogr. A. 1490 (2017) 2–9. https://doi.org/10.1016/j.chroma.2016.11.010.

[35] N. Borg, Y. Brodsky, J. Moscariello, S. Vunnum, G. Vedantham, K. Westerberg, B. Nilsson, Modeling and robust pooling design of a preparative cation-exchange chromatography step for purification of monoclonal antibody monomer from aggregates, J. Chromatogr. A. 1359 (2014) 170–181. https://doi.org/10.1016/j.chroma.2014.07.041.

[36] O. Kaltenbrunner, Y. Lu, A. Sharma, K. Lawson, T. Tressel, Risk-benefit evaluation of on-line high-performance liquid chromatography analysis for pooling decisions in large-scale chromatography, J. Chromatogr. A. 1241 (2012) 37–45. https://doi.org/10.1016/j.chroma.2012.04.003.

[37] A.S. Rathore, R. Wood, A. Sharma, S. Dermawan, Case study and application of process analytical technology (PAT) towards bioprocessing: II. Use of ultra-performance liquid chromatography (UPLC) for making real-time pooling decisions for process chromatography, Biotechnol. Bioeng. 101 (2008) 1366–1374. https://doi.org/10.1002/bit.21982.

[38] A.S. Rathore, M.; Yu, S.; Yeboah, A.; Sharma, Case study and application of process analytical technology (PAT) towards bioprocessing: Use of on-line high-performance liquid chromatography (HPLC) for making real-time pooling decisions for process chromatography, Biotechnol. Bioeng. 100 (2008) 306–316. https://doi.org/10.1002/bit.21759.

[39] D.B. Broughton, C.G. Gerhold, Continuous sorption process employing fixed bed of sorbent and moving inlets and outlets, US2985589A, 1961.

[40] V. Warikoo, R. Godawat, K. Brower, S. Jain, D. Cummings, E. Simons, T. Johnson, J. Walther, M. Yu, B. Wright, J. Mclarty, K.P. Karey, C. Hwang, W. Zhou, F. Riske, K. Konstantinov, Integrated continuous production of recombinant therapeutic proteins, Biotechnol. Bioeng. 109 (2012) 3018–3029. https://doi.org/10.1002/bit.24584.

[41] V. Girard, N.J. Hilbold, C.K.S. Ng, L. Pegon, W. Chahim, F. Rousset, V. Monchois, Large-scale monoclonal antibody purification by continuous chromatography, from process design to scale-up, J. Biotechnol. 213 (2015) 65–73.

https://doi.org/10.1016/j.jbiotec.2015.04.026.

[42] R. Godawat, K. Brower, S. Jain, K. Konstantinov, F. Riske, V. Warikoo, Periodic counter-current chromatography - design and operational considerations for integrated and continuous purification of proteins, Biotechnol. J. 7 (2012) 1496–1508. https://doi.org/10.1002/biot.201200068.

[43] J. Pollock, J. Coffman, S. V. Ho, S.S. Farid, Integrated continuous bioprocessing: Economic, operational, and environmental feasibility for clinical and commercial antibody manufacture, Biotechnol. Prog. 33 (2017) 854–866. https://doi.org/10.1002/btpr.2492.

[44] E. Mahajan, A. George, B. Wolk, Improving affinity chromatography resin efficiency using semi-continuous chromatography, J. Chromatogr. A. 1227 (2012) 154–162. https://doi.org/10.1016/j.chroma.2011.12.106.

[45] J. Pollock, G. Bolton, J. Coffman, S. V. Ho, D.G. Bracewell, S.S. Farid, Optimising the design and operation of semi-continuous affinity chromatography for clinical and commercial manufacture, J. Chromatogr. A. 1284 (2013) 17–27. https://doi.org/10.1016/j.chroma.2013.01.082.

[46] A.S. Rathore, S. Mittal, S. Lute, K. Brorson, Chemometrics applications in biotechnology processes: Predicting column integrity and impurity clearance during reuse of chromatography resin, Biotechnol. Prog. 28 (2012) 1308–1314. https://doi.org/10.1002/btpr.1610.

[47] C.L. Gargalo, I. Udugama, K. Pontius, P.C. Lopez, R.F. Nielsen, A. Hasanzadeh, S.S. Mansouri, C. Bayer, H. Junicke, K. V. Gernaey, Towards smart biomanufacturing: a perspective on recent developments in industrial measurement and monitoring technologies for bio-based production processes, J. Ind. Microbiol. Biotechnol. (2020) 1–18. https://doi.org/10.1007/s10295-020-02308-1.

[48] R. Luttmann, D.G. Bracewell, G. Cornelissen, K. V. Gernaey, J. Glassey, V.C. Hass, C. Kaiser, C. Preusse, G. Striedner, C.F. Mandenius, Soft sensors in bioprocessing: A status report and recommendations, Biotechnol. J. 7 (2012) 1040–1048. https://doi.org/10.1002/biot.201100506.

[49] C.F. Mandenius, R. Gustavsson, Mini-review: Soft sensors as means for PAT in the manufacture of bio-therapeutics, J. Chem. Technol. Biotechnol. 90 (2015) 215–227. https://doi.org/10.1002/jctb.4477.

[50] J.M. Vargas, S. Nielsen, V. Cárdenas, A. Gonzalez, E.Y. Aymat, E. Almodovar, G.

Classe, Y. Colón, E. Sanchez, R.J. Romañach, Process analytical technology in continuous manufacturing of a commercial pharmaceutical product, Int. J. Pharm. 538 (2018) 167–178. https://doi.org/10.1016/j.ijpharm.2018.01.003.

[51] S.L. Brunton, J.N. Kutz, Data-Driven Science and Engineering, 2019. https://doi.org/10.1017/9781108380690.

[52] B.H. Mevik, R. Wehrens, The pls package: Principal component and partial least squares regression in R, J. Stat. Softw. (2007). https://doi.org/10.18637/jss.v018.i02.

[53] T. Mehmood, K.H. Liland, L. Snipen, S. Sæbø, A review of variable selection methods in Partial Least Squares Regression, Chemom. Intell. Lab. Syst. (2012). https://doi.org/10.1016/j.chemolab.2012.07.010.

[54] S. Goldrick, A. Umprecht, A. Tang, R. Zakrzewski, M. Cheeks, R. Turner, A. Charles, K. Les, M. Hulley, C. Spencer, S.S. Farid, High-Throughput Raman Spectroscopy Combined with Innovate Data Analysis Workflow to Enhance Biopharmaceutical Process Development, Processes. 8 (2020) 1179. https://doi.org/10.3390/pr8091179.

[55] S. Goldrick, W. Holmes, N.J. Bond, G. Lewis, M. Kuiper, R. Turner, S.S. Farid, Advanced multivariate data analysis to determine the root cause of trisulfide bond formation in a novel antibody-peptide fusion, Biotechnol. Bioeng. 114 (2017) 2222–2234. https://doi.org/10.1002/bit.26339.

[56] N. Andersson, A. Löfgren, M. Olofsson, A. Sellberg, B. Nilsson, P. Tiainen, Design and control of integrated chromatography column sequences, Biotechnol. Prog. 33 (2017) 923–930. https://doi.org/10.1002/btpr.2434.

[57] R.A. Chmielowski, L. Mathiasson, H. Blom, D. Go, H. Ehring, H. Khan, H. Li, C. Cutler, K. Lacki, N. Tugcu, D. Roush, Definition and dynamic control of a continuous chromatography process independent of cell culture titer and impurities, J. Chromatogr. A. 1526 (2017) 58–69. https://doi.org/10.1016/j.chroma.2017.10.030.

[58] N. Brestrich, A. Sanden, A. Kraft, K. Mccann, J. Bertolini, J. Hubbuch, Advances in inline quantification of co-eluting proteins in chromatography: Process-data-based model calibration and application towards real-life separation issues, Biotechnol. Bioeng. 112 (2015) 1406–1416. https://doi.org/10.1002/bit.25546.

[59] S.K. Hansen, B. Jamali, J. Hubbuch, Selective high throughput protein quantification based on UV absorption spectra, Biotechnol. Bioeng. 110 (2013) 448–460. https://doi.org/10.1002/bit.24712.

[60] M. Rüdt, N. Brestrich, L. Rolinger, J. Hubbuch, Real-time monitoring and control of the load phase of a protein A capture step, Biotechnol. Bioeng. 114 (2017) 368–373. https://doi.org/10.1002/bit.26078.

[61] F. Steinebach, M. Angarita, D.J. Karst, T. Müller-Späth, M. Morbidelli, Model based adaptive control of a continuous capture process for monoclonal antibodies production, J. Chromatogr. A. 1444 (2016) 50–56. https://doi.org/10.1016/j.chroma.2016.03.014.

[62] G. Thakur, V. Hebbi, A.S. Rathore, An NIR-based PAT approach for real-time control of loading in Protein A chromatography in continuous manufacturing of monoclonal antibodies, Biotechnol. Bioeng. 117 (2020) 673–686. https://doi.org/10.1002/bit.27236.

[63] M. Boulet-audet, S.G. Kazarian, B. Byrne, In-column ATR-FTIR spectroscopy to monitor affinity chromatography purification of monoclonal antibodies, Nat. Publ. Gr. (2016) 1–13. https://doi.org/https://doi.org/10.1038/srep30526.

[64] A. Edelmann, B. Lendl, Toward the optical tongue: Flow-through sensing of tannin-protein interactions based on FTIR spectroscopy, J. Am. Chem. Soc. 124 (2002) 14741–14747. https://doi.org/10.1021/ja026309v.

[65] M. Pathak, K. Lintern, T.F. Johnson, A.M. Nair, S. Mukherji, D.G. Bracewell, A.S. Rathore, Analytical tools for monitoring changes in physical and chemical properties of chromatography resin upon reuse, Electrophoresis. 40 (2019) 3074–3083. https://doi.org/10.1002/elps.201900089.

[66] M. Pathak, A.S. Rathore, Implementation of a fluorescence based PAT control for fouling of protein A chromatography resin, J. Chem. Technol. Biotechnol. 92 (2017) 2799–2807. https://doi.org/10.1002/jctb.5358.

[67] K. Buckley, A.G. Ryder, Applications of Raman Spectroscopy in Biopharmaceutical Manufacturing: A Short Review, Appl. Spectrosc. 71 (2017) 1085–1116. https://doi.org/10.1177/0003702817703270.

[68] F. Feidl, S. Garbellini, S. Vogg, M. Sokolov, J. Souquet, H. Broly, A. Butté, M. Morbidelli, A new flow cell and chemometric protocol for implementing in-line Raman spectroscopy in chromatography, Biotechnol. Prog. 35 (2019) 1–10. https://doi.org/10.1002/btpr.2847.

[69] F. Feidl, S. Garbellini, M.F. Luna, S. Vogg, J. Souquet, H. Broly, M. Morbidelli, A. Butté, Combining mechanistic modeling and raman spectroscopy for monitoring antibody chromatographic purification, Processes. 7 (2019). https://doi.org/10.3390/pr7100683.

[70] R.L. McCreery, Raman Spectroscopy for Chemical Analysis, 2001. https://doi.org/10.1088/0957-0233/12/5/704.

[71] S. Feng, Z. Zheng, Y. Xu, J. Lin, G. Chen, C. Weng, D. Lin, S. Qiu, M. Cheng, Z. Huang, L. Wang, R. Chen, S. Xie, H. Zeng, A noninvasive cancer detection strategy based on gold nanoparticle surface-enhanced raman spectroscopy of urinary modified nucleosides isolated by affinity chromatography, Biosens. Bioelectron. 91 (2017) 616–622. https://doi.org/10.1016/j.bios.2017.01.006.

[72] C. Zhou, W. Qi, E.N. Lewis, J.F. Carpenter, Characterization of Sizes of Aggregates of Insulin Analogs and the Conformations of the Constituent Protein Molecules: A Concomitant Dynamic Light Scattering and Raman Spectroscopy Study, J. Pharm. Sci. 105 (2016) 551–558. https://doi.org/10.1016/j.xphs.2015.10.023.

[73] D.R. Parachalil, B. Brankin, J. McIntyre, H.J. Byrne, Raman spectroscopic analysis of high molecular weight proteins in solution-considerations for sample analysis and data pre-processing, Analyst. 143 (2018) 5987–5998. https://doi.org/10.1039/c8an01701h.

[74] J. Stetefeld, S.A. McKenna, T.R. Patel, Dynamic light scattering: a practical guide and applications in biomedical sciences, Biophys. Rev. 8 (2016) 409–427. https://doi.org/10.1007/s12551-016-0218-6.

[75] E. Sahin, C.J. Roberts, Size-Exclusion Chromatography with Multi-angle Light Scattering for Elucidating Protein Aggregation Mechanisms, in: Methods Mol. Biol., 2012: pp. 403–423. https://doi.org/10.1007/978-1-61779-921-1_25.

[76] B.A. Patel, A. Gospodarek, M. Larkin, S.A. Kenrick, M.A. Haverick, N. Tugcu, M.A. Brower, D.D. Richardson, Multi-angle light scattering as a process analytical technology measuring real-time molecular weight for downstream process control, MAbs. 10 (2018) 1–6. https://doi.org/10.1080/19420862.2018.1505178.

[77] N. Brestich, M. Rüdt, D. Büchler, J. Hubbuch, Selective protein quantification for preparative chromatography using variable pathlength UV/Vis spectroscopy and partial least squares regression, Chem. Eng. Sci. 176 (2018) 157–164. https://doi.org/10.1016/j.ces.2017.10.030.

[78] M. Arrio-Dupont, Fluorescence of Aromatic Amino Acids in a Pyridoxal Phosphate Enzyme: Aspartate Aminotransferase, Eur. J. Biochem. 91 (1978) 369–378. https://doi.org/10.1111/j.1432-1033.1978.tb12689.x.

[79] C.P. Moon, K.G. Fleming, Using tryptophan fluorescence to measure the stability of membrane proteins folded in liposomes, 1st ed., Elsevier Inc., 2011.

https://doi.org/10.1016/B978-0-12-381268-1.00018-5.

[80] S.M. Raja, S.S. Rawat, A. Chattopadhyay, A.K. Lala, Localization and environment of tryptophans in soluble and membrane- bound states of a pore-forming toxin from Staphylococcus aureus, Biophys. J. 76 (1999) 1469–1479. https://doi.org/10.1016/S0006-3495(99)77307-8.

[81] C. Rausell, L. Pardo-López, J. Sánchez, C. Muñoz-Garay, C. Morera, M. Soberón, A. Bravo, Unfolding events in the water-soluble monomeric Cry1Ab toxin during transition to oligomeric pre-pore and membrane-inserted pore channel, J. Biol. Chem. 279 (2004) 55168–55175. https://doi.org/10.1074/jbc.M406279200.

[82] D.G. Sauer, M. Melcher, M. Mosor, N. Walch, M. Berkemeyer, T. Scharl-Hirsch, F. Leisch, A. Jungbauer, A. Dürauer, Real-time monitoring and model-based prediction of purity and quantity during a chromatographic capture of fibroblast growth factor 2, Biotechnol. Bioeng. 116 (2019) 1999–2009. https://doi.org/10.1002/bit.26984.

[83] N. Walch, T. Scharl, E. Felföldi, D.G. Sauer, M. Melcher, F. Leisch, A. Dürauer, A. Jungbauer, Prediction of the Quantity and Purity of an Antibody Capture Process in Real Time, Biotechnol. J. 14 (2019). https://doi.org/10.1002/biot.201800521.

[84] L.K. Shekhawat, A.S. Rathore, An overview of mechanistic modeling of liquid chromatography, Prep. Biochem. Biotechnol. 49 (2019) 623–638. https://doi.org/10.1080/10826068.2019.1615504.

[85] A. Osberghaus, S. Hepbildikler, S. Nath, M. Haindl, E. von Lieres, J. Hubbuch, Optimizing a chromatographic three component separation: A comparison of mechanistic and empiric modeling approaches, J. Chromatogr. A. (2012). https://doi.org/10.1016/j.chroma.2012.03.029.

[86] D. Roush, D. Asthagiri, D.K. Babi, S. Benner, C. Bilodeau, G. Carta, P. Ernst, M. Fedesco, S. Fitzgibbon, M. Flamm, J. Griesbach, T. Grosskopf, E.B. Hansen, T. Hahn, S. Hunt, F. Insaidoo, A. Lenhoff, J. Lin, H. Marke, B. Marques, E. Papadakis, F. Schlegel, A. Staby, M. Stenvang, L. Sun, P.M. Tessier, R. Todd, E. Lieres, J. Welsh, R. Willson, G. Wang, T. Wucherpfennig, O. Zavalov, Toward in silico CMC: An industrial collaborative approach to model-based process development , Biotechnol. Bioeng. (2020). https://doi.org/10.1002/bit.27520.

[87] E.J. Close, J.R. Salm, D.G. Bracewell, E. Sorensen, Modelling of industrial biopharmaceutical multicomponent chromatography, Chem. Eng. Res. Des. 92 (2014) 1304–1314. https://doi.org/10.1016/j.cherd.2013.10.022.

[88] E.J. Close, J.R. Salm, D.G. Bracewell, E. Sorensen, A model based approach for identifying robust operating conditions for industrial chromatography with process variability, Chem. Eng. Sci. 116 (2014) 284–295. https://doi.org/10.1016/j.ces.2014.03.010.

[89] V. Kumar, A.M. Lenhoff, Mechanistic Modeling of Preparative Column Chromatography for Biotherapeutics, Annu. Rev. Chem. Biomol. Eng. 11 (2020) 235–255. https://doi.org/10.1146/annurev-chembioeng-102419-125430.

[90] V. Kumar, A.S. Rathore, Mechanistic Modeling Based PAT Implementation for Ion-Exchange Process Chromatography of Charge Variants of Monoclonal Antibody Products, Biotechnol. J. (2017). https://doi.org/10.1002/biot.201700286.

[91] K. Westerberg, M. Degerman, B. Nilsson, Pooling control in variable preparative chromatography processes, Bioprocess Biosyst. Eng. (2010). https://doi.org/10.1007/s00449-009-0335-8.

[92] B. Sreedhar, A. Wagler, M. Kaspereit, A. Seidel-Morgenstern, Optimal cut-times finding strategies for collecting a target component from overloaded elution chromatograms, Comput. Chem. Eng. 49 (2013) 158–169. https://doi.org/10.1016/j.compchemeng.2012.09.009.

[93] J. Gomis-Fons, H. Schwarz, L. Zhang, N. Andersson, B. Nilsson, A. Castan, A. Solbrand, J. Stevenson, V. Chotteau, Model-based design and control of a small-scale integrated continuous end-to-end mAb platform, Biotechnol. Prog. (2020). https://doi.org/10.1002/btpr.2995.

[94] S. Leweke, E. von Lieres, Chromatography Analysis and Design Toolkit (CADET), Comput. Chem. Eng. (2018). https://doi.org/10.1016/j.compchemeng.2018.02.025.

[95] F. Rischawy, D. Saleh, T. Hahn, S. Oelmeier, J. Spitz, S. Kluters, Good modeling practice for industrial chromatography: Mechanistic modeling of ion exchange chromatography of a bispecific antibody, Comput. Chem. Eng. 130 (2019). https://doi.org/10.1016/j.compchemeng.2019.106532.

[96] T. Briskot, F. Stückler, F. Wittkopp, C. Williams, J. Yang, S. Konrad, K. Doninger, J. Griesbach, M. Bennecke, S. Hepbildikler, J. Hubbuch, Prediction uncertainty assessment of chromatography models using Bayesian inference, J. Chromatogr. A. 1587 (2019) 101–110. https://doi.org/10.1016/j.chroma.2018.11.076.

[97] H.L. Wade, PID Control, in: Basic Adv. Regul. Control - Syst. Des. Appl., 3rd ed., ISA, 2017.

[98] M. Krättli, F. Steinebach, M. Morbidelli, Online control of the twin-column countercurrent solvent gradient process for biochromatography, J. Chromatogr. A. 1293 (2013) 51–59. https://doi.org/10.1016/j.chroma.2013.03.069.

[99] M. Krättli, G. Ströhlein, L. Aumann, T. Müller-Späth, M. Morbidelli, Closed loop control of the multi-column solvent gradient purification process, J. Chromatogr. A. (2011). https://doi.org/10.1016/j.chroma.2011.09.081.

[100] T. Müller-Späth, L. Aumann, L. Melter, G. Ströhlein, M. Morbidelli, Chromatographic separation of three monoclonal antibody variants using multicolumn countercurrent solvent gradient purification (MCSGP), Biotechnol. Bioeng. (2008). https://doi.org/10.1002/bit.21843.

[101] D.E. Seborg, T.F. Edgar, D.A. Mellichamp, F.J. Doyle III, Process dynamics and control, 4th ed., 2016.

[102] B.R. Mehta, Y.J. Reddy, Industrial process automation systems: Design and implementation, 2014. https://doi.org/10.1016/C2013-0-18954-4.

[103] M.M. Papathanasiou, B. Burnak, J. Katz, N. Shah, E.N. Pistikopoulos, Assisting continuous biomanufacturing through advanced control in downstream purification, Comput. Chem. Eng. 125 (2019) 232–248. https://doi.org/10.1016/j.compchemeng.2019.03.013.

[104] S. Natarajan, J.H. Lee, Repetitive model predictive control applied to a simulated moving bed chromatography system, in: Comput. Chem. Eng., 2000. https://doi.org/10.1016/S0098-1354(00)00493-2.

[105] E. Kloppenburg, E.D. Gilles, Automatic control of the simulated moving bed process for C8 aromatics separation using asymptotically exact input/output-linearization, J. Process Control. (1999). https://doi.org/10.1016/S0959-1524(98)00026-2.

[106] C. Grossmann, G. Ströhlein, M. Morari, M. Morbidelli, Optimizing model predictive control of the chromatographic multi-column solvent gradient purification (MCSGP) process, J. Process Control. (2010). https://doi.org/10.1016/j.jprocont.2010.02.013.

[107] E.N. Pistikopoulos, N.A. Diangelakis, R. Oberdieck, M.M. Papathanasiou, I. Nascu, M. Sun, PAROC - An integrated framework and software platform for the optimisation and advanced model-based control of process systems, Chem. Eng. Sci. (2015). https://doi.org/10.1016/j.ces.2015.02.030.

[108] M.M. Papathanasiou, F. Steinebach, M. Morbidelli, A. Mantalaris, E.N. Pistikopoulos,

Intelligent, model-based control towards the intensification of downstream processes, Comput. Chem. Eng. (2017). https://doi.org/10.1016/j.compchemeng.2017.01.005.

[109] M.M. Papathanasiou, S. Avraamidou, R. Oberdieck, A. Mantalaris, F. Steinebach, M. Morbidelli, T. Mueller-Spaeth, E.N. Pistikopoulos, Advanced control strategies for the multicolumn countercurrent solvent gradient purification process, AIChE J. (2016). https://doi.org/10.1002/aic.15203.

[110] M.M. Papathanasiou, B. Burnak, J. Katz, N. Shah, E.N. Pistikopoulos, Control of a dual mode separation process via multi-parametric Model Predictive Control, in: IFAC-PapersOnLine, 2019. https://doi.org/10.1016/j.ifacol.2019.06.191.

[111] M.M. Papathanasiou, B. Burnak, J. Katz, T. Müller-Späth, M. Morbidelli, N. Shah, E.N. Pistikopoulos, Control of Small-Scale Chromatographic Systems Under Disturbances, in: Comput. Aided Chem. Eng., 2019. https://doi.org/10.1016/B978-0-12-818597-1.50043-6.

[112] S. Goldrick, K. Lee, C. Spencer, W. Holmes, M. Kuiper, R. Turner, S.S. Farid, On-Line Control of Glucose Concentration in High-Yielding Mammalian Cell Cultures Enabled Through Oxygen Transfer Rate Measurements, Biotechnol. J. 13 (2018) 1700607. https://doi.org/10.1002/biot.201700607.

[113] A. Grönberg, M. Eriksson, M. Ersoy, H.J. Johansson, A tool for increasing the lifetime of chromatography resins, MAbs. 3 (2011) 192–202. https://doi.org/https://doi.org/10.4161/mabs.3.2.14874.

[114] BioPhorum Operations Group Ltd, In-Line Monitoring/Real-Time Release Testing in Biopharmaceutical Processes-Prioritization and Cost-Benefit Analysis, (2020).

[115] R.L. Fahrner, P.M. Lester, G.S. Blank, D.H. Reifsnyder, Real-time control of purified product collection during chromatography of recombinant human insulin-like growth factor-I using an on-line assay, 827 (1998) 37–43.

[116] A.S. Rathore, G. Kapoor, Application of process analytical technology for downstream purification of biotherapeutics, J. Chem. Technol. Biotechnol. 90 (2015) 228–236. https://doi.org/10.1002/jctb.4447.

8. Figures

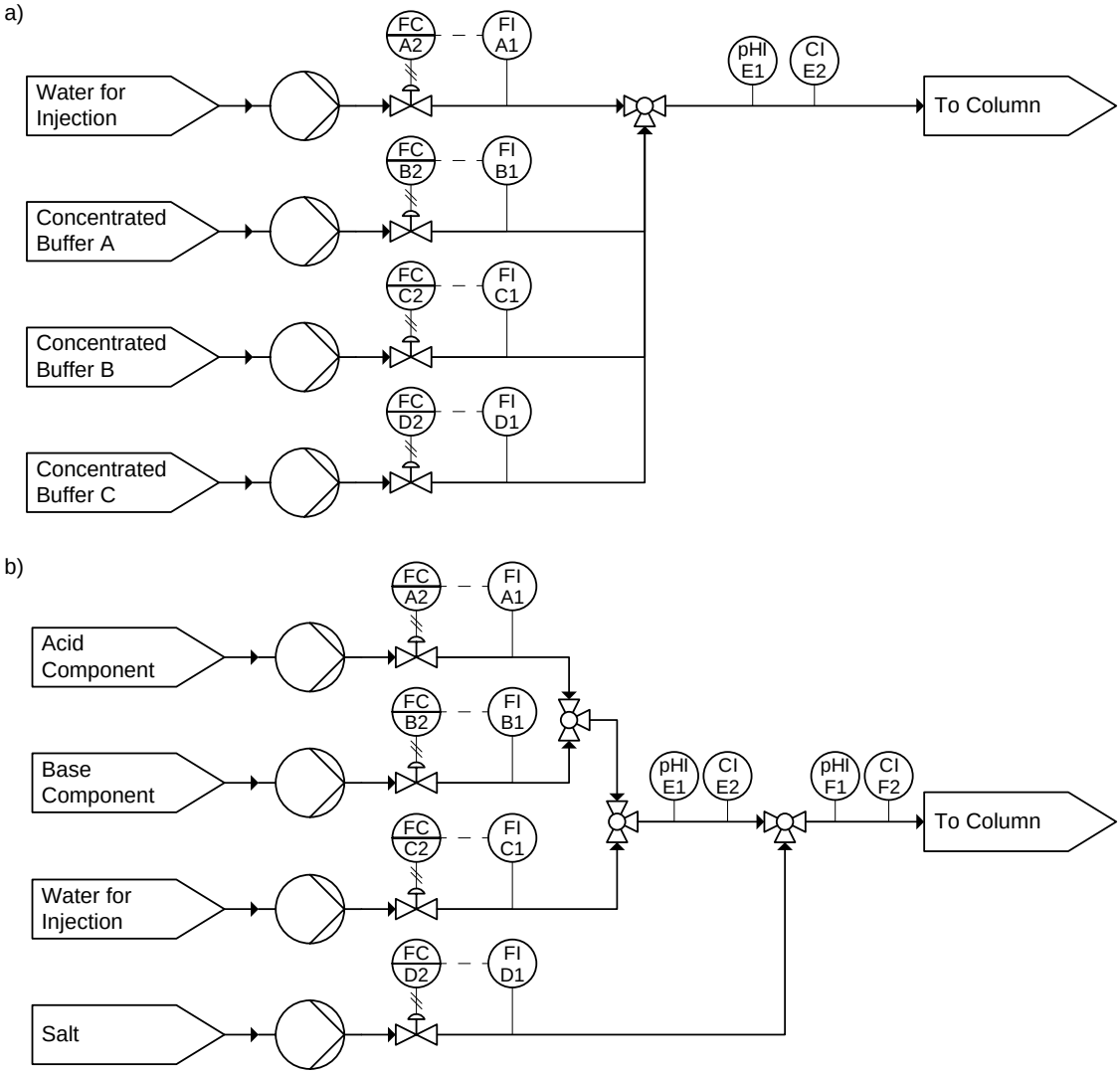

Key					
Name	**Symbol**	**Name**	**Symbol**	**Name**	**Symbol**
PUMP		PANEL MOUNTED INSTRUMENT		3-WAY VALVE	
PROCESS STREAM		LOCAL INSTRUMENT		FLOW CONTROL VALVE	
INSTRUMENT CONNECTION		PNEUMATIC SIGNAL		INTERNAL DATA LINK	

Instrument Labelling:

A – Parameter; B – Function; AB; XY; X – Control Loop ID; Y – Control Instrument ID

A – Parameter	B – Function
A - Analyser	C - Controller
C - Conductivity	I - Indicator
F - Flow	T - Transmitter
pH - pH	
T - Temperature	

Figure 1. Example control schematics for an in-line buffer dilution (ILD) system (a) and an in-line buffer conditioning (ILC) system (b). Both schematics demonstrate feedback flow control, where the required input stream flowrates are determined before buffer formulation. The controllers use in-line flowrate measurements to ensure flowrates are at the required set-points, and that the outlet flowrate is maintained constant. If a deviation from the set-point is observed, the controllers adjust the flow control valve position to eliminate the error. Additional pH and conductivity measurements are taken to ensure the buffers meet the specifications prior to use.

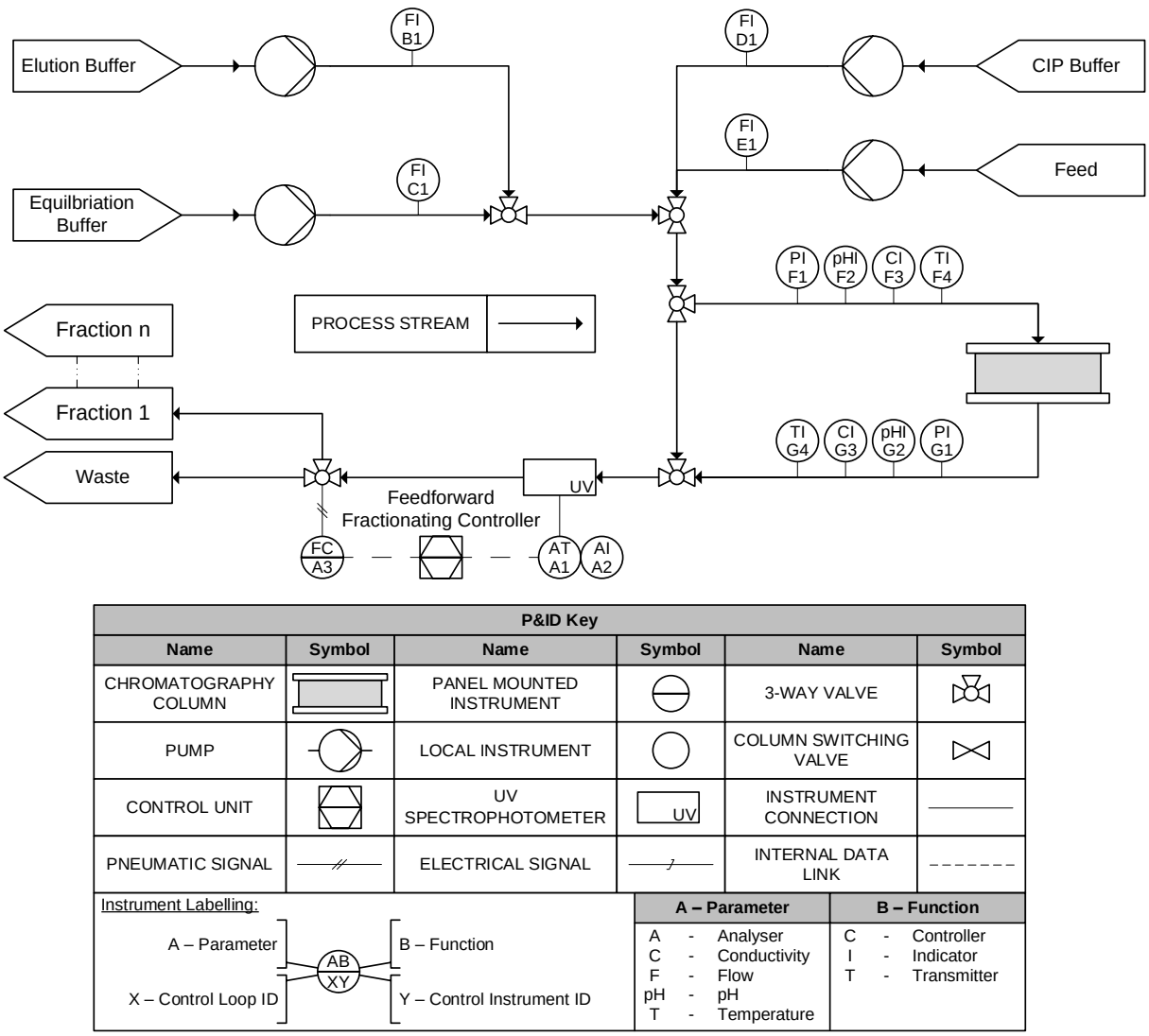

Figure 2. Example piping and instrumentation diagram (P&ID) for a batch chromatography protein purification process at industrial scale. The diagram demonstrates process monitoring and control technologies used routinely in industry, most notably a fractionation controller. The P&ID is not intended to be exhaustive however, it does provide a useful overview of the relevant control and monitoring systems.

(a)

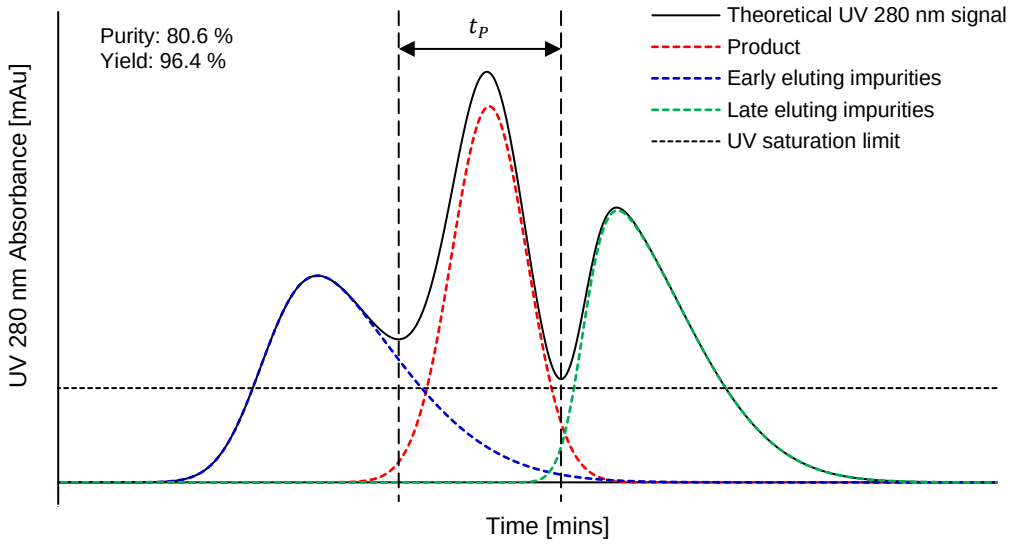

(b)

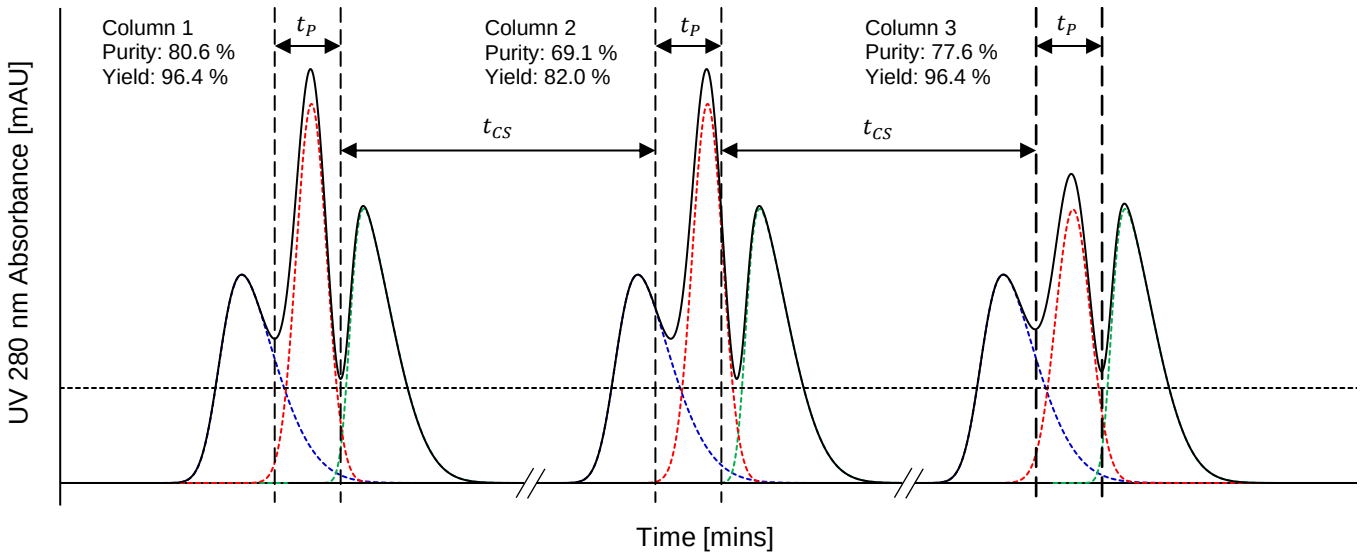

Figure 3. Example chromatograms highlighting the impact of the fractionation strategy based on UV 280 nm monitoring at the column(s) outlet for (a) batch and (b) continuous chromatography modes of chromatography. In (a), product collection is instigated when the absorbance increases due to the presence of product in the central peak. Product collection is stopped when the UV absorbance increases again, due to the presence of impurities. This determines the product collection time, t_p. The individual absorbance of each component is plotted to demonstrate the improved insight obtained via spectral deconvolution. Note also that an example UV saturation limit is plotted. The UV 280 nm signal is unable to surpass this value if operated with a fixed pathlength. In (b), a traditional continuous chromatography fractionation strategy is demonstrated where the time between column switches, t_{CS}, and t_p are constant. Product purity and yield was calculated using the trapezium rule.

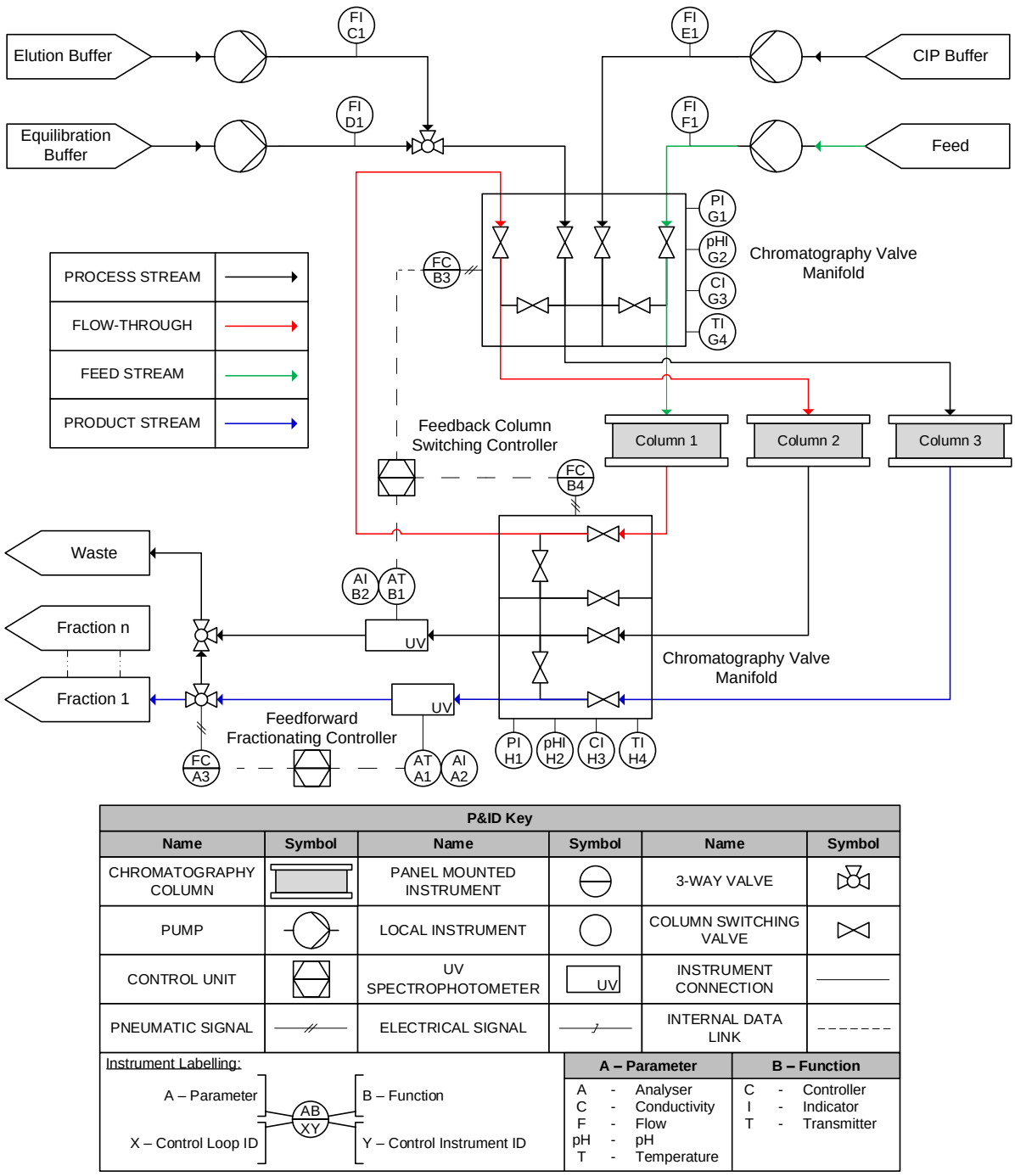

Figure 4. Example piping and instrumentation diagram (P&ID) for a three-column continuous chromatography protein purification process at industrial scale. The diagram demonstrates process monitoring and control technologies used routinely in industry, including a fractionation controller and a column switching controller. The P&ID highlights the flow of the feed into the system, the flow-through stream, and the product elution stream. The P&ID is not intended to be exhaustive however, it does provide a useful overview of the relevant control and monitoring systems.

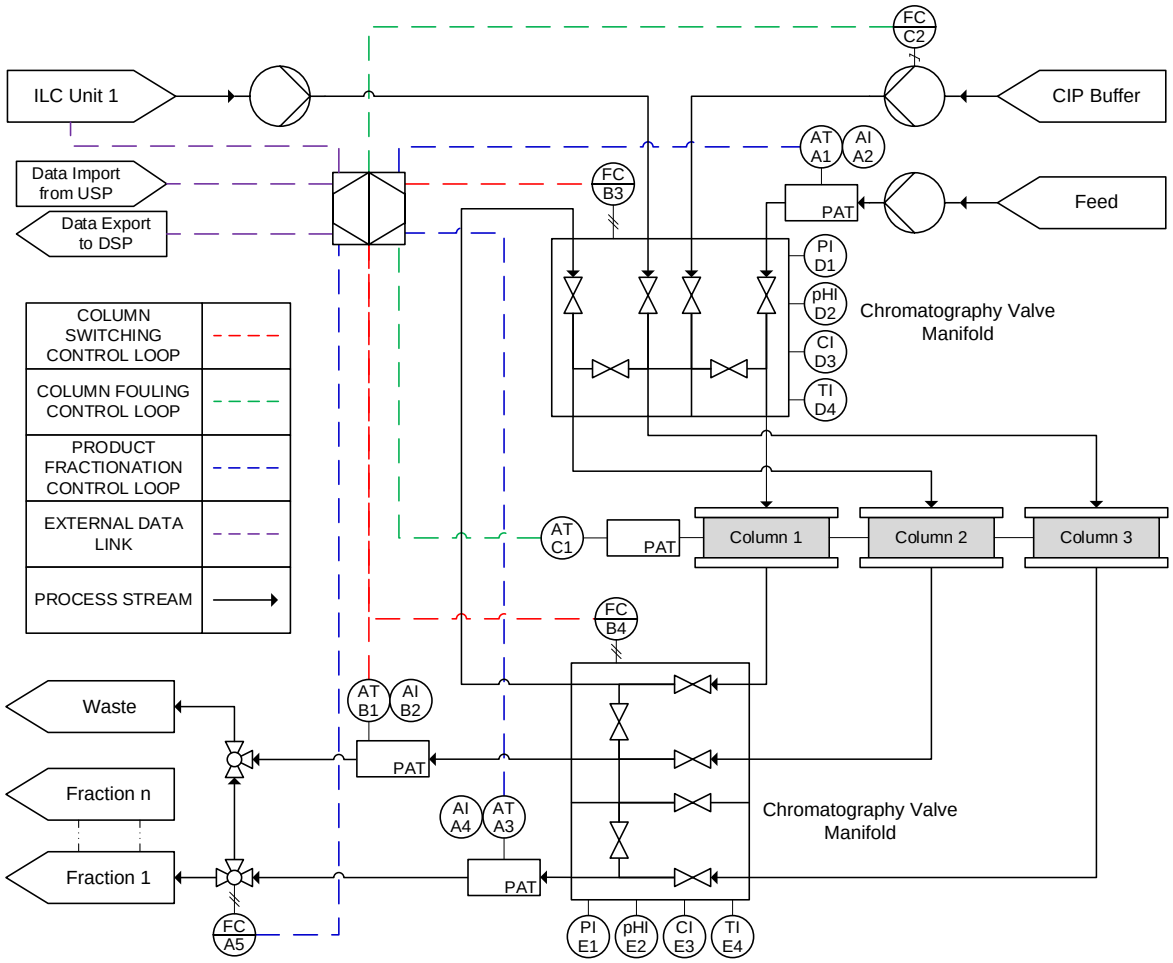

P&ID Key					
Name	**Symbol**	**Name**	**Symbol**	**Name**	**Symbol**
CHROMATOGRAPHY COLUMN		PANEL MOUNTED INSTRUMENT		3-WAY VALVE	
PUMP		LOCAL INSTRUMENT		COLUMN SWITCHING VALVE	
ADVANCED CONTROL UNIT		PAT SPECTROPHOTOMETER	PAT	INSTRUMENT CONNECTION	
PNEUMATIC SIGNAL		ELECTRICAL SIGNAL		DATA LINK	

Instrument Labelling:

A – Parameter — B – Function

AB

XY

X – Control Loop ID — Y – Control Instrument ID

A – Parameter			B – Function		
A	-	Analyser	C	-	Controller
C	-	Conductivity	I	-	Indicator
F	-	Flow	T	-	Transmitter
pH	-	pH			
T	-	Temperature			

Figure 5. The future outlook of chromatography control. An example piping and instrumentation diagrams (P&ID) for a future continuous chromatography protein purification process at industrial scale. The diagram demonstrates the implementation of additional Process Analytical Technologies (PAT) for monitoring and control of column fouling, column switching, buffer formulation, and product fractionation. The chromatography control unit utilizes the process data from each PAT to optimize the control strategies for each sub-loop. Note that flow indicators were removed from the feed streams to ensure that the control loops were indicated with clarity.

9. Tables

Table 1. Example product quality attributes, process parameters and performance attributes relevant to chromatography processes for therapeutic protein manufacturing.

Product Quality Attributes	Process Parameters	Performance Attributes
Aggregate content	Bed height	Buffer consumption
Charge profile	Elution conductivity	Process productivity
DNA content	Elution pH	Product pool concentration
Fragment content	Equilibration pH	Product pool volume
HCP content	Feed impurity content	Product yield
Leached Protein A content	Feed product concentration	Resin regeneration efficiency
Protein concentration	Load conductivity	Resin utilisation
Viral content	Load pH	
	Operating flowrate	
	Pressure	
	Product collection start time/volume	
	Product collection stop time/volume	
	Protein loading	
	Resin lifetime	
	Temperature	
	Wash conductivity	
	Wash pH	

Note: Product quality attributes and process parameters may be identified as critical quality attributes (CQAs) or critical process parameters (CPPs) respectively via risk assessment during chromatography process development. However, performance attributes do not impact product quality and therefore cannot be classified as CQAs or CPPs but are important for process efficiency reasons [19]. The information was compiled from [18,19,25,114].

Table 2. Summary of chromatography process control strategies in industry.

Equipment	Location	Attribute(s) Measured	Process Variable(s) Controlled	Benefits	Issues	References
In-line UV Spectrophotometer	Column outlet	Protein concentration	Product fractionation times	• Well-established and commercially available technology • Cheap to purchase and operate • Robust operation • Non-invasive • Data obtained rapidly • Multiple wavelengths can be used to detect different components	• Instrument saturation likely due to limited linear range • Unable to differentiate between product and impurities when elution peaks overlap • Industrial UV detectors designed for operating robustness at the expense of sensitivity and responsiveness.	[36,115,116]
On-line HPLC	Column outlet	Protein concentration	Product fractionation times	• Well-established and commercially available technology • Can distinguish between product and impurities, even when they are not well resolved. • Can handle a wide product concentration range • Analysis times of under 10 minutes reported • Assay is well understood and reliable	• Not suitable for informing real-time control decisions • Potential for human error introduced if not automated • Additional sampling and HPLC equipment required on manufacturing floor • Risk of contamination increased	[36,37,115,116]
In-line Buffer Dilution (ILD) System	Buffer feed to column	Flowrates of all the ILD inlet and outlet streams, and final buffer pH and conductivity	Final buffer composition, pH and conductivity	• Substantial reduction in buffer storage requirements thereby reducing inventory, capital and cleaning costs • The buffer concentration can be adjusted during the process • Can be used to facilitate controlled gradient elution by blending buffers together • Feedback control improves robustness by reducing buffer variability	• Concentrated buffers require precise formulation as dilution propagates any residual formulation error • pH and conductivity changes must be accounted for during dilution • Buffer flexibility can be limited if one buffer concentrate is used to produce the final buffer • May require additional pumps and delivery lines to enable conductivity and pH control • Additional validation and maintenance costs introduced	[29–32]
In-line Buffer Conditioning (ILC) System	Buffer feed to column	Flowrates of all the ILC inlet and outlet streams, and final buffer pH and conductivity	Final buffer composition, pH and conductivity	• Substantial reduction in buffer storage requirements thereby reducing inventory, capital and cleaning costs • Buffer preparation is simplified reducing labour requirements • Shorter buffer preparation times • Single component concentrates have longer shelf-life than final buffer solution • Reduced risk of waste buffer	• Requires at least 4 inlets, each with its own pump, valves and controls • Feedback control results in consumption of additional buffer until a stable pH and/or conductivity is obtained (~1 min to obtain stable conditions) • Novelty of the system and consumption of buffer as it is produced introduces more regulatory considerations	[29,33]

		• Can be used to facilitate controlled gradient elution • Feedback control improves robustness by reducing buffer variability	• Additional validation and maintenance costs introduced

1473 **Table 3.** Summary of chromatography process control strategies in research and process development.

Equipment	Location	Attribute Measured and Model Implemented	Process Variable(s) Controlled	Benefits	Issues	References
UV Spectrophotometer	Column outlet OR Column outlet and inlet	Protein concentration • Single UV-wavelength model	• Column switching • Product fractionation times	• Column switching and fractionation dictated by product breakthrough • No time-based performance decline after 31 days and 160 cycles of continuous operation • Can handle high feed concentrations (>30 g/L) • Control independent of the cell culture feedstock and titer	• Increased implementation and operational complexity • Single wavelength absorbance cannot differentiate between product and impurity	[40,56,57]
	Column outlet	Protein concentration • Multi-wavelength PLS model	• Product fractionation times	• Differentiates product and impurities by utilizing UV-spectra rather than single wavelength during loading • Improved product purity and yields	• Challenges related to the scale up, robustness of the method, and the optimization of the measurement time • Accuracy of model suffers as number of impurities increases	[60]
	Column inlet and outlet	Protein concentration • Single UV-wavelength model fed into mechanistic model	• Column switching • Product fractionation times	• Model accounts for variation in feed • Column switching and fractionation dictated by product breakthrough • 2.5-fold higher capacity utilization	• Low concentration ranges utilized (0.2-0.8 g/L) • Model may not capture all variability present in the system	[61]
Variable pathlength UV-vis Spectrophotometer	Column outlet AND/OR inlet	Protein concentration • Single UV-wavelength or multi-wavelength PLS model	• Column switching • Product fractionation times	• Accurate measurements over a large concentration range (<80 g/L) • Differentiates product and impurities • Column switching and fractionation dictated by predicted protein concentrations	• Large measurement time (~30s) • Single wavelength absorbance cannot differentiate between product and impurity	[22,77]
Near Infrared Spectrophotometer	Column inlet and outlet	Protein concentration • Multi-wavelength PLS model	• Column switching • Product fractionation times	• Rapid measurements (3s) • High accuracy and precision of mAb quantification • Column switching and fractionation dictated by inlet concentration and predicted protein concentration	• Has currently not been scaled up for industrial scale	[62]
Multi-angle light scattering (MALS)	Column Outlet	Protein aggregate levels • MALS/UV dual model	• Product fractionation times	• Rapid measurements (<1s) • Reduces and controls aggregate levels in fractions • Removes the need for post purification analysis	• Rapid changes in concentration may affect MALS accuracy • May be challenging to implement in other unit operations with significant difference in	[22,76]

					matrices and buffer conductivities. *E.g* bind-and-elute chromatography	
Tryptophan Fluorescence Spectrophotometer	In-column	Monitoring and control of resin fouling • Single-wavelength fluorescence model	• CIP	• Predicts critical fouling levels • Improves column lifespan • Optimizes CIP buffer utilization • No significant loss of yield observed after 200 cycles	• Only determines column fouling and must be combined with other PATs/control methods • Single wavelength utilization limits the accuracy of the PAT	[65,66]
Attenuated Total Reflection-Fourier Transform Infrared (ATR-FTIR) Spectrophotometer	In-column	Monitoring and control of resin fouling • Multi-wavelength PLS model	• CIP	• Predicts critical fouling levels • Improves column lifespan • Optimizes CIP buffer utilization • Spectra based PLS model	• Only determines column fouling and must be combined with other PATs/control methods • Further scale-up studies are required.	[63]